Scottish Hydro Electric Power Distribution plc

Use of System Charging Statement

NOTICE OF CHARGES

Effective from 1st April 2026

Version 1.2

The form of this statement was approved by the Gas and Electricity Markets Authority on 31 March 2025.

Scottish and Southern Electricity Networks is a trading name of: Scottish and Southern Energy Power Distribution Limited Registered in Scotland No. SC213459; Scottish Hydro Electric Transmission plc Registered in Scotland No. SC213461; Scottish Hydro Electric Power Distribution plc Registered in Scotland No SC213460 (all having their Registered Offices at Inveralmond House 200 Dunkeld Road Perth PH1 3AQ); and Southern Electric Power Distribution plc Registered in England & Wales No. 04094290 having its Registered Office at No. 1 Forbury Place, 43 Forbury Road, Reading, Berks, RG1 3JH. www.ssen.co.uk

Version Control

Version	Date	Description of version and any changes made
V 1.0	14/02/2025	SHEPD DUoS Charges Final April 2026 (LC14 format)
V 1.1	19/02/2026	Annex 2 – Addition of new MPANs and updated LLFCs/MSIDs Annex 5 – Addition of LLFs Annex 6 – Addition of new or amended charges and/or LLFs
V 1.2	October 2026	Annex 6 – Addition of new or amended charges and/or LLFs

A change-marked version of this statement can be provided upon request.

Contents

1. . Introduction 5

Validity period 5
Contact details 6

2. . Charge Application and Definitions 7

Supercustomer/Aggregated Billing and Payment 7
Supercustomer/Aggregated Charges 8
Site-Specific Billing and Payment 8
Site-Specific Billed Charges 8
Time Periods 9
Application of Capacity Charges 10
Chargeable Capacity 10
Exceeded Capacity 10
Demand Exceeded Capacity 10
Generation Exceeded Capacity 10
Standby Capacity for Additional Security on Site 11
Minimum Capacity Levels 11
Application of charges for reactive power 11
Demand Chargeable Reactive Power 11
Generation Chargeable Reactive Power 11
Allocation of Charges 12
Generation Charges for Pre-2005 designated EHV properties 13
Provision of billing data 13
Out of Area Use of System Charges 13
Licensed Distributor Network Operator charges 13
Licence exempt distribution networks 14
Full settlement metering 14
Difference metering 14
Shared Metering 14
Gross settlement 14

3. . Schedule of Charges for use of the Distribution System 16

4. . Schedule of Line Loss Factors 17

Role of Line Loss Factors in the Supply of Electricity 17
Calculation of Line Loss Factors 17
Publication of Line Loss Factor tables 17

5. . Notes for Designated EHV Properties 19

EDCM network group costs 19
Charges for New Designated EHV Properties 19
Charges for Amended Designated EHV Properties 19
Demand Side Management 19

6. . Electricity Distribution Rebates 20

7. . Accounting and Administration Services 21

8. . Charges for electrical plant provided ancillary to the grant of Use of System 22

9. . Schedule of fixed adders to recover Supplier of Last Resort and Eligible Bad Debt pass-through costs 23

Supplier of Last Resort 23
Eligible Bad Debt 23
Tables of Fixed Adders 23

10. Non-Final Demand Sites 24

11. Back-up Connections 25

Appendix 1 – Glossary 26

Appendix 2 - Guidance notes 33

Background 33
Meter point administration 33
Your charges 34
Reducing your charges 34
Reactive power and reactive power charges 34
Site-specific EDCM charges 35
Additional Notes 37

Appendix 3 – Non-Final Demand Site Certificate 38

Annex 1 - Schedule of Charges for use of the Distribution System by LV and HV Designated Properties, and Unmetered Supplies 39

Annex 2 - Schedule of Charges for use of the Distribution System by Designated EHV Properties (including LDNOs with Designated EHV Properties/end-users) 44

Annex 3 - Schedule of Charges for use of the Distribution System by Preserved/Additional LLF Classes 59

Annex 4 - Charges applied to LDNOs with HV/LV end users 60

Annex 5 – Schedule of Line Loss Factors 75

LLF time periods: 75

Annex 6 – Charges for New or Amended Designated EHV Properties 92

Annex 7 – Final Supplier of last Resort and Eligible Bad Debt Pass-Through Costs 95

1. Introduction

1.1 This statement tells you about our charges and the reasons behind them. It has been prepared consistent with Standard Licence Condition 14 of our Electricity Distribution Licence. The main purpose of this statement is to provide our schedule of charges[1] for the use of our Distribution System and to provide the schedule of Line Loss Factors[2] that should be applied in Settlement to account for losses from the Distribution System. We have also included guidance notes in Appendix 2 to help improve your understanding of the charges we apply.

1.2 Within this statement we use terms such as 'Users' and 'Customers' as well as other terms which are identified with initial capitalisation. These terms are defined in the Glossary.

1.3 This statement reflects the changes which have been introduced as a result of Market Wide Half Hourly Settlement (MHHS[3]). Although the existing arrangements will continue to apply for Non-Migrated MPANs, the MHHS arrangements will be effective for any MPAN that has Migrated, any differences in treatment are highlighted throughout the document.

1.4 The charges in this statement are calculated using the following methodologies as per the Distribution Connection and use of system Agreement (DCUSA)[4]:

- Common Distribution Charging Methodology (CDCM); for Low Voltage (LV) and High Voltage (HV) Designated Properties as per DCUSA Schedule 16; and
- Extra-High Voltage (EHV) Distribution Charging Methodology (EDCM) for Designated EHV Properties as per DCUSA Schedule 17.
- Price Control Disaggregation Model (PCDM); for Discount Percentages used to calculate the LDNO Use of System charges in the CDCM and EDCM as per DCUSA Schedule 29.

1.5 Separate charges are calculated depending on the characteristics of the connection and whether the use of the Distribution System is for demand or generation purposes. Where a generation connection is seen to support the Distribution System the charges will be negative and the Supplier will receive credits for exported energy.

1.6 The application of charges to premises can usually be referenced using the Line Loss Factor Class (LLFC)/DUoS Tariff ID contained in the charge tables. Further information on how to identify and calculate the charge that will apply for your premises is provided in the guidance notes in Appendix 2.

1.7 All charges in this statement are shown **exclusive** of VAT. Invoices will include VAT at the applicable rate.

1.8 The annexes that form part of this statement are also available in spreadsheet format. This spreadsheet contains supplementary information used for charging purposes and a simple model to assist you to calculate charges. This spreadsheet can be downloaded from our website www.ssen.co.uk.

Validity period

1.9 This charging statement is valid for services provided from the effective date stated on the front of the statement and remains valid until updated by a revised version or superseded by a statement with a later effective date.

1.10 When using this charging statement care should be taken to ensure that the relevant statement or statements covering the period that is of interest are used.

---

[1] Charges can be positive or negative.

[2] Known as adjustment factors in the Distribution Licence and commonly referred to as Loss Adjustment Factors. The schedule of Line Loss Factors will be provided in a revised statement shortly after the Line Loss Factors for the relevant year have been successfully audited by Elexon

[3] Information relating to the Market wide HH Settlement Programme available from Home - MHHS Programme

[4] The Distribution and Connection Use of System Agreement (DCUSA) available from DCUSA Document - DCUSA

1.11 Notice of any revision to the statement will be provided to Users of our Distribution System (with the exception of updates to Annex 6; New or Amended EHV Sites which will be published as an addendum). The latest statements can be downloaded from www.ssen.co.uk.

Contact details

1.12 If you have any questions about this statement please contact us at the address shown below:

Distribution Pricing Team
Scottish Hydro Electric Power Distribution plc
Inveralmond House
200 Dunkeld Road
Perth
PH1 3AQ
Email: DistributionPricingTeam@sse.com

1.13 All enquiries regarding Connection Agreements, changes to Maximum Capacities, and certification of Non-Final Demand sites should be addressed to:

Email: authorised.capacity@sse.com

Post:
Authorised Capacity
Scottish and Southern Electricity Networks
Daneshill Depot
Faraday Road
Basingstoke
RG24 8QQ

1.14 For all other queries please contact our general enquiries telephone number: 0800 048 3516.

2. Charge Application and Definitions

2.1 The following section details how the charges in this statement are applied and billed to Users of our Distribution System.

The Supercustomer/Aggregated and site-specific billing

2.2 We utilise two billing approaches depending on the type of metering data received:

- The 'Supercustomer/Aggregated' approach for Customers for whom we receive aggregated consumption data through Settlement; and
- The 'Site-specific' approach for Customers for whom we receive site-specific consumption data through Settlement.

2.3 We receive aggregated consumption data through Settlement for:

Non-Migrated MPANs:

- Domestic and non-domestic Customers for whom Non-Half Hourly (NHH) metering data is used in Settlement (i.e. Customers with MPANs which are registered to Measurement Class A);
- Customers which are unmetered and are not settled as pseudo Half Hourly (HH) metered (i.e. Customers with MPANs which are registered to Measurement Class B);
- Domestic Customers for whom HH metering data is used in Settlement (i.e. Customers with MPANs which are registered to Measurement Class F); and
- Non-domestic Customers for whom HH metering data is used in Settlement and which have whole current (WC) metering (i.e. Customers with MPANs which are registered to Measurement Class G).

Migrated MPANs:

- All Customers who have a Connection Type that indicates a Whole Current connection, i.e. with Connection Type 'W'.

2.4 We receive site specific consumption data through Settlement for:

Non-Migrated MPANs:

- Customers for whom HH metering data is used in Settlement and which have current transformer (CT) metering (i.e. Customers with MPANs which are registered to measurement class C or E); and
- Customers which are unmetered and settled as pseudo HH metered (i.e. Customers with MPANs which are registered to measurement class D).

Migrated MPANs:

- All Customers who have a Connection Type of 'L' Low Voltage, 'H' High Voltage, 'E' Extra-High Voltage or 'U' Unmetered.

Supercustomer/Aggregated Billing and Payment

2.5 The Supercustomer/Aggregated approach makes use of aggregated data obtained from Suppliers using the 'Aggregated Distribution Use of System (DUoS) Report' data flow for Non-Migrated MPANs, and the 'LDSO report for DUoS – aggregated data' message or the 'Embedded Network report for DUoS – aggregated data' message for Migrated MPANs.

2.6 Invoices are calculated on a periodic basis and sent to each User for whom we transport electricity through our Distribution System. Invoices are reconciled, over a period of approximately 14 months to reflect later and more accurate consumption figures, this will reduce to four months following MHHS implementation.

2.7 The charges are applied on the basis of the LLFC/DUoS Tariff ID assigned to the MPAN, and the units consumed within the time periods specified in Annex 1. All LLFCs/DUoS Tariff IDs are assigned at our sole discretion, based on the tariff application rules set out in the appropriate

charging methodology or elsewhere in this statement. Please refer to the section 'Allocation of Charges' for further details.

Supercustomer/Aggregated Charges

2.8 Supercustomer/Aggregated charges are generally billed through the following components:

- a fixed charge, pence/MPAN/day; there will only be one fixed charge applied to each MPAN; and
- unit charges, pence/kilowatt-hour (kWh); three unit charges will apply depending on the time of day and the type of tariff for which the MPAN is registered.

2.9 Users who wish to supply electricity for whom we receive aggregated data through Settlement (see paragraph 2.3) will be allocated the relevant charge structure set out in Annex 1.

2.10 Identification of the appropriate charge can be made by cross reference to the LLFC/DUoS Tariff ID.

2.11 For Non-Migrated MPANs the Valid Settlement Profile Class (PC) /Standard Settlement Class (SSC)/ Meter Timeswitch Code (MTC) combinations for LLFCs where the Metering System is Measurement Class A or B are detailed in Market Domain Data (MDD). For Migrated MPANs the appropriate reference data is contained in Industry Standing Data (ISD).

2.12 Where an MPAN has an invalid Settlement Combination, the 'Domestic Aggregated with Residual' fixed and unit charges will be applied as default until the invalid combination is corrected. Where there are multiple SSC/TPR combinations for Non-Migrated MPANs, the default 'Domestic Aggregated with Residual' fixed and unit charges will be applied for each invalid SSC/TPR combination.

2.13 The 'Domestic Aggregated (related MPAN)' and 'Non-Domestic Aggregated (related MPAN)' charges are supplementary to their respective primary MPAN charge.

Site-Specific Billing and Payment

2.14 The site-specific billing and payment approach makes use of HH metering data at premises level received through Settlement.

2.15 Invoices are calculated on a periodic basis and sent to each User for whom we transport electricity through our Distribution System. Where an account is based on estimated data, the account shall be subject to any adjustment that may be necessary following the receipt of actual data from the User.

2.16 The charges are applied on the basis of the LLFC/DUoS Tariff ID assigned to the MPAN or MSID for Central Volume Allocation (CVA) sites, and the units consumed within the time periods specified in this statement.

2.17 All LLFCs/DUoS Tariff IDs are assigned at our sole discretion, based on the tariff application rules set out in the appropriate charging methodology or elsewhere in this statement. Please refer to the section 'Allocation of Charges' if you believe the allocated LLFC/DUoS Tariff ID or tariff is incorrect.

Site-Specific Billed Charges

2.18 Site-specific billed charges for LV and HV Designated Properties may include the following components:

- a fixed charge in pence/MPAN/day for SVA sites, or pence/MSID/day for CVA sites;
- a capacity charge in pence/kilovolt-ampere (kVA) /day, for Maximum Import Capacity (MIC) and/or Maximum Export Capacity (MEC);
- an exceeded capacity charge in pence/kVA/day, if a site exceeds its MIC and/or MEC;
- three unit charges in pence/kWh, depending on the time of day and the type of tariff for which the MPAN is registered; and
- a reactive power charge in pence/kilovolt-ampere reactive hour (kVArh), for each unit in excess of the reactive charge threshold.

2.19 Site-specific billed charges for properties that are under transitional protection arrangements for BSC Modification P432 or MHHS will include only fixed and unit charges, in the same manner as Supercustomer/Aggregate charges, as described in 2.8.

2.20 Users who wish to supply electricity to Customers for whom we receive site-specific data through Settlement (see paragraph 2.4) will be allocated the relevant charge structure dependent upon the voltage and location of the Metering Point.

2.21 Fixed charges are generally levied on a pence per MPAN/MSID per day basis.

2.22 LV and HV Designated Properties will be charged in accordance with the CDCM and allocated the relevant charge structure set out in Annex 1.

2.23 Designated EHV Properties will be charged in accordance with the EDCM and allocated the relevant charge structure set out in Annex 2.

2.24 Where LV and HV Designated Properties or Designated EHV Properties have more than one point of connection (as identified in the Connection Agreement) then separate charges will be applied to each point of connection.

Components of Charges

Application of Residual Charges

2.25 The following sections explain the application of residual charges.

Final Demand Sites

2.26 Residual charges are recovered through fixed charges for all Final Demand Sites All Non-Final Demand Sites must submit a valid certificate, as described in Section 10, and upon receipt of a valid certificate will be allocated to the relevant No Residual Tariff.

2.27 All Back-up Connections must provide clear supporting documentary evidence to the reasonable satisfaction of the LDNO, as described in Section 11, and upon receipt of sufficient evidence will be allocated to the relevant No Residual tariff.

Residual Charging Bands

2.28 Residual charges are applied to Final Demand Sites on a banded basis, with all sites in a given charge band receiving the same residual charge. Domestic customers have a single charging band.

2.29 There are four non-domestic charging bands for each of the following groups:

- Designated Properties connected at LV, billing with no MIC;
- Designated Properties connected at LV, billing with MIC;
- Designated Properties connected at HV; and
- Designated EHV Properties.

2.30 All non-domestic Final Demand customers are allocated into one of the four charging bands, for each relevant charge structure.

2.31 The residual charging band boundaries are calculated nationally based upon data from all LDNOs. The method and timing for calculating the residual charging band boundaries and the method and timing for allocating customers into the residual charging bands are set out in Schedule 32 of DCUSA.

2.32 The boundaries for the residual bands can be found in the 'Schedule of Charges and Other Tables' spreadsheet on our website, as well as the mapping between the DUoS Tariff name and TNUOS site charging band.

Time Periods

2.33 The time periods for the application of unit charges to LV and HV Designated Properties are detailed in Annex 1. We have not issued a notice to change the time bands.

2.34 The time periods for the application of unit charges to Unmetered Supply Exit Points are detailed in Annex 1. We have not issued a notice to change the time bands.

2.35 The time periods for the application of unit charges to Designated EHV Properties are detailed in Annex 2. We have not issued a notice to change the time bands.

Application of Capacity Charges

2.36 The following sections explain the application of capacity charges and exceeded capacity charges.

Chargeable Capacity

2.37 The chargeable capacity is, for each billing period, the MIC/MEC as detailed below.

2.38 The MIC/MEC will be agreed with us at the time of connection or pursuant to a later change in requirements. Following such an agreement (be it at the time of connection or later) no reduction in MIC/MEC will be allowed for a 12 month period.

2.39 Reductions to the MIC and/or MEC may only be permitted once in a 12 month period. Where the MIC/MEC is reduced the new lower level will be agreed with reference to the level of the Customer's maximum import and/or export demand respectively. The new MIC/MEC will be applied from the start of the next billing period after the date that the request was received. It should be noted that, where a new lower level is agreed, the original capacity may not be available in the future without the need for network reinforcement and associated charges.

2.40 In the absence of an agreement, the chargeable capacity, save for error or omission, will be based on the last MIC/MEC previously agreed by us for the relevant premises' connection. A Customer can seek to agree or vary the MIC/MEC by contacting us using the contact details in section 1.11.

Exceeded Capacity

2.41 Where a Customer takes additional unauthorised capacity over and above the MIC/MEC, the excess will be classed as exceeded capacity. The exceeded portion of the capacity will be charged at the exceeded capacity charge p/kVA/day rate, based on the difference between the MIC/MEC and the actual capacity used. This will be charged for the duration of the full month in which the breach occurs.

Demand Exceeded Capacity

$$\text{Demand Exceeded Capacity} = \max(2 \times \sqrt{AI^2 + \max(RI, RE)^2} - MIC, 0)$$

Where:
AI = Active Import (kWh)
RI = Reactive Import (kVArh)
RE = Reactive Export (kVArh)
MIC = Maximum Import Capacity (kVA)

2.42 Only reactive import and reactive export values occurring at times of active import are used in the calculation. Where data for two or more MPANs is aggregated for billing purposes the HH consumption values are summated prior to the calculation above.

2.43 This calculation is completed for every half hour and the maximum value from the billing period is applied.

Generation Exceeded Capacity

$$\text{Generation Exceeded Capacity} = \max(2 \times \sqrt{AE^2 + \max(RI, RE)^2} - MEC, 0)$$

Where:
AE = Active Export (kWh)
RI = Reactive Import (kVArh)
RE = Reactive Export (kVArh)
MEC = Maximum Export Capacity (kVA)

2.44 Only reactive import and reactive export values occurring at times of active export are used in the calculation. Where data for two or more MPANs is aggregated for billing purposes the HH consumption values occurring at times of kWh export are summated prior to the calculation above.

2.45 This calculation is completed for every half hour and the maximum value from the billing period is applied.

Standby Capacity for Additional Security on Site

2.46 Where standby capacity charges are applied, the charge will be set at the same rate as that applied to the normal MIC. Should a Customer's request for additional security of supply require the provision of capacity from two different sources, we reserve the right to charge for the capacity held at each source.

Minimum Capacity Levels

2.47 There is no minimum capacity threshold.

Application of charges for reactive power

2.48 When an individual HH metered MPAN's reactive power (measured in kVArh) at LV and HV Designated Properties exceeds 33% of its total active power (measured in kWh), reactive power charges will apply. This threshold is equivalent to an average power factor of 0.95 during the period. Any reactive units in excess of the 33% threshold are charged at the rate appropriate to the particular charge.

2.49 Power Factor is calculated as follows:

Cos θ = Power Factor

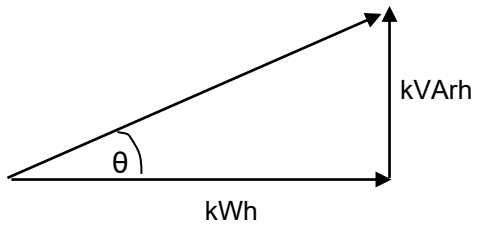

2.50 The chargeable reactive power is calculated as follows:

Demand Chargeable Reactive Power

$$\text{Demand Chargeable kVArh} = \max\left(\max(\text{RI},\text{RE}) - \left(\sqrt{\left(\frac{1}{0.95^2} - 1\right)} \times \text{AI}\right), 0\right)$$

Where:
AI = Active Import (kWh)
RI = Reactive Import (kVArh)
RE = Reactive Export (kVArh)

2.51 Only reactive import and reactive export values occurring at times of active import are used in the calculation. Where data for two or more MPANs is aggregated for billing purposes the HH consumption values are summated prior to the calculation above.

2.52 The square root calculation will be to two decimal places.

2.53 This calculation is completed for every half hour and the values summated over the billing period.

Generation Chargeable Reactive Power

$$\text{Generation Chargeable kVArh} = \max\left(\max(\text{RI},\text{RE}) - \left(\sqrt{\left(\frac{1}{0.95^2} - 1\right)} \times \text{AE}\right), 0\right)$$

Where:
AE = Active Export (kWh)
RI = Reactive Import (kVArh)
RE = Reactive Export (kVArh)

2.54 Only reactive import and reactive export values occurring at times of active export are used in the calculation. Where data for two or more MPANs is aggregated for billing purposes the HH consumption values are summated prior to the calculation above.

2.55 The square root calculation will be to two decimal places.

2.56 This calculation is completed for every half hour and the values summated over the billing period.

Allocation of Charges

2.57 It is our responsibility to apply the correct charges to each MPAN/MSID. The allocation of charges is based on the voltage of connection, import/export details including multiple MPANs, metering information and, for some tariffs, the metering location.

2.58 We are responsible for deciding the voltage of connection. Generally, this is determined by where the metering is located and where responsibility for the electrical equipment transfers from us to the connected Customer.

2.59 We are also responsible for allocating non-domestic customers into their residual charging bands. Allocation into residual charging bands is determined by consumption for customers billed under the Supercustomer/Aggregated approach and for properties that are under transitional protection arrangements for BSC Modification P432 or MHHS, and by the MIC for all other customers billed under the site-specific approach.

2.60 The Supplier determines and provides us with the metering information and data. This enables us to allocate charges where there is more than one charge per voltage level. The metering information and data is likely to change over time if, for example, a Supplier changes from a two rate meter to a single rate meter. When we are notified this has happened we will change the allocation of charges accordingly.

2.61 If it has been identified that a charge has been incorrectly allocated due to the metering information and/or data then a correction request should be made to the Supplier.

2.62 Where it has been identified that:

(a) a charge is likely to be incorrectly allocated due to the voltage of connection, import/export details or metering location, or allocation to residual charging band; or

(b) a connection may be eligible for Low Voltage Substation tariff(s);

a request to investigate the applicable charges should be made to us. Requests from persons other than the Customer or the current Supplier must be accompanied by a Letter of Authority from the Customer and the current Supplier must also acknowledge that they are aware a request has been made. Any request must be supported by an explanation of why it is believed that the current charge should be changed, along with supporting information including, where appropriate, photographs of metering positions or system diagrams. Any request to change the current charge that also includes a request for backdating must include justification as to why it is considered appropriate to backdate the change.

2.63 Where a residual charging band allocation cannot be resolved, the process provided within DCUSA Schedule 32 should be followed.

2.64 An administration charge (covering our reasonable costs) may be made if a technical assessment or site visit is required, but we will not apply any charge where we agree to the change request.

2.65 Where we agree that the current LLFC/DUoS Tariff ID charge should be changed, we will then allocate the appropriate set of charges for the connection. Any adjustment will be applied from the date of the request back to either:

(a) the date of incorrect allocation in respect of paragraphs 2.61 or 2.62(a); or

(b) up to the maximum period specified by the Prescription and Limitation (Scotland) Act 1973 in Scotland, which covers a five year period;

whichever is the shorter.

2.66 Any credit or additional charge will be issued to the relevant Supplier(s) effective during the period of the change.

2.67 Should we reject the request a justification will be provided to the requesting Party. We shall not unreasonably withhold or delay any decision on a request to change the charges applied and would expect to confirm our position on the request within three months of the date of request.

Generation Charges for Pre-2005 designated EHV properties

2.68 Designated EHV Properties that were connected to the Distribution System under a pre-2005 connection charging policy are eligible for exemption from DUoS charges for generation unless one of the following criteria has been met:

- 25 years have passed since their first energisation/connection date, i.e. Designated EHV Properties with Connection Agreements dated prior to 1st April 2005, and for which 25 years has passed since their first energisation/connection date will receive use of system charges for generation from the next charging year following the expiry of their 25 years exemption starting 1st April, or
- the person responsible for the Designated EHV Property has provided notice to us that they wish to opt in to DUoS charges for generation.
- If a notice to opt in has been provided there will be no further opportunity to opt out.

2.69 Furthermore, if an exempt Customer makes an alteration to its export requirement then the Customer may be liable to be charged for the additional capacity required for energy imported or exported. For example, where a generator increases its export capacity the incremental increase in export capacity will attract DUoS charges as with other non-exempt generators.

Provision of billing data

2.70 Where HH metering data is required for DUoS charging and this is not provided in accordance with the BSC or DCUSA, such metering data shall be provided by the User of the system to us in respect of each calendar month within five working days of the end of that calendar month.

2.71 The metering data shall identify the amount of energy conveyed across the Metering System in each half hour of each day and shall separately identify active and reactive import and export. Metering data provided to us shall be consistent with that received through the metering equipment installed.

2.72 Metering data shall be provided in an electronic format specified by us from time to time and in the absence of such specification, metering data shall be provided in a comma-separated text file in the format of data flow D0275[5] for Non-Migrated MPANs, and the IF-21 message for Migrated MPANs (as agreed with us). The data shall be e-mailed to duos.income.billing@sse.com.

2.73 We require details of reactive power imported or exported to be provided for all Measurement Class C and E sites for Non-Migrated MPANs, and for all Migrated MPANs with a Connection Type of 'L', 'H', or 'E'. It is also required for CVA sites and Exempt Distribution Network boundaries with difference metering. We reserve the right to levy a charge on Users who fail to provide such reactive data. In order to estimate missing reactive data, a power factor of 0.95 lag will be applied to the active consumption in any half hour.

Out of Area Use of System Charges

2.74 We operate embedded distribution networks in the other DNO area in Scotland. The charges for these 'out of area' networks are provided in a separate charging statement. This statement is available from our website www.ssen.co.uk.

Licensed Distributor Network Operator charges

2.75 Licensed Distribution Network Operator (LDNO) charges are applied to LDNOs who operate Embedded Networks within our Distribution Services Area.

2.76 The charge structure for LV and HV Designated Properties embedded in networks operated by LDNOs will mirror the structure of the "All-the-way" charge and is dependent upon the voltage of connection of each Embedded Network to the Host DNO's network. The relevant charge structures are set out in Annex 4.

2.77 Where a NHH metered MPAN has an invalid Settlement combination, the 'LDNO HV: Domestic Aggregated with Residual' fixed and unit charges will be applied as default until the invalid combination is corrected. Where there are multiple SSC/TPR combinations for Non-Migrated

[5] Data Transfer Catalogue available from https://www.electralink.co.uk/dtc-catalogue

MPANs, the default 'LDNO HV: Domestic Aggregated with Residual' fixed and unit charges will be applied for each invalid TPR combination.

2.78 The charge structure for Designated EHV Properties embedded in networks operated by LDNOs will be calculated individually using the EDCM. The relevant charge structures are set out in Annex 2.

2.79 For Nested Networks the relevant charging principles set out in DCUSA Schedule 21 will apply.

Licence exempt distribution networks

2.80 The Electricity and Gas (Internal Market) Regulations 2011[6] introduced obligations on owners of licence exempt distribution networks (sometimes called private networks) including a duty to facilitate access to electricity and gas Suppliers for Customers within those networks.

2.81 When Customers (both domestic and commercial) are located within a licence exempt distribution network and require the ability to choose their own Supplier this is called 'third party access'. These embedded Customers will require an MPAN so that they can have their electricity supplied by a Supplier of their choice.

2.82 Licence exempt distribution networks owners can provide third party access using either full settlement metering or the difference metering approach. [7]

Full settlement metering

2.83 This is where a licence exempt distribution network is set up so that each embedded installation has an MPAN and Metering System and therefore all Customers purchase electricity from their chosen Supplier. In this case there are no Settlement Metering Systems at the boundary between the licensed Distribution System and the licence exempt distribution network.

2.84 In this approach our DUoS charges may be applied to each MPAN.

Difference metering

2.85 This is where one or more, but not all, Customers on a licence exempt distribution network choose their own Supplier for electricity supply to their premises. Under this approach the Customers requiring third party access on the licence exempt distribution network will have their own MPAN and must have a HH Metering System.

Shared Metering

2.86 This is where one or more Customers on a license exempt distribution network choose their own Supplier for electricity supply to their premises, and the active import and/or active export meter readings at the boundary are apportioned between the Suppliers. Under this approach, the Customers requiring third party access on the license exempt distribution network will have their own MPAN and must have a HH Metering System.

2.87 In this approach our DUoS charges may be applied to each MPAN.

Gross settlement

2.88 Where one of our MPANs (prefixed by the number 17) is embedded within a licence exempt distribution network connected to our Distribution System, and difference metering is in place for Settlement purposes and we receive gross measurement data for the boundary MPAN, we will continue to charge the boundary MPAN Supplier for use of our Distribution System. No charges will be levied by us directly to the Customer or Supplier of the embedded MPAN(s) connected within the licence exempt distribution network.

2.89 We require that gross metered data for the boundary of the connection is provided to us. Until a new industry data flow is introduced for the sending of such gross data, gross metered data shall:

- be provided in a text file in the format of the D0036 or D0275 data flow;
- the text file shall be emailed to duos.income.billing@sse.com;

[6] The Electricity and Gas (Internal Market) Regulations 2011 available from http://www.legislation.gov.uk/uksi/2011/2704/contents/made

[7] Elexon's guide is available from https://www.elexon.co.uk/guidance-note/third-party-access-licence-exempt-distribution-networks/

- the title of the email should also contain the phrase “gross data for difference metered private network” and contain the metering reference specified by us in place of the Settlement MPAN; and
- the text filename shall be formed of the metering reference specified by us followed by a hyphen and followed by a timestamp in the format YYYYMMDDHHMMSS and followed by “.txt”.

2.90 For the avoidance of doubt, the reduced difference metered measurement data for the boundary connection that is to enter Settlement should continue to be sent using the Settlement MPAN.

3. Schedule of Charges for use of the Distribution System

3.1 Tables listing the charges for use of our Distribution System are published in annexes to this document.

3.2 These charges are also listed in a spreadsheet which is published with this statement and can be downloaded from our website www.ssen.co.uk.

3.3 Annex 1 contains the charges applied to LV and HV Designated Properties.

3.4 Annex 2 contains the charges applied to Designated EHV Properties and charges applied to LDNOs for Designated EHV Properties connected to their Distribution Systems.

3.5 Annex 3 contains details of any preserved and additional charges that are valid at this time. Preserved charges are mapped to an appropriate charge and are closed to new Customers.

3.6 Annex 4 contains the charges applied to LDNOs in respect of LV and HV Designated Properties connected to their Distribution Systems.

4. Schedule of Line Loss Factors

Role of Line Loss Factors in the Supply of Electricity

4.1 Electricity entering or exiting our Distribution System is adjusted to take account of energy that is lost[8] as it is distributed through the network. This adjustment does not affect distribution charges but is used in energy settlement to take metered consumption to a notional Grid Supply Point so that Suppliers' purchases take account of the energy lost on the Distribution System.

4.2 We are responsible for calculating the Line Loss Factors (LLFs) and providing these to Elexon. Elexon is the company that manages the BSC.

4.3 LLFs are used to adjust the Metering System volumes to take account of losses on the Distribution System.

Calculation of Line Loss Factors

4.4 LLFs are calculated in accordance with BSCP128 which sets out the procedures and principles with which our LLF methodology must comply. It also defines the procedure and timetable by which LLFs are reviewed and submitted.

4.5 LLFs are calculated for a set number of time periods during the year, using either a generic or a site specific method. The generic method is used for sites connected at LV or HV and the site specific method is used for sites connected at EHV or where a request for site specific LLFs has been agreed. Generic LLFs will be applied as a default to all new EHV sites until sufficient data is available for a site specific calculation.

Where the usage profile for a given site contains insufficiently large consumption or generation volumes to enable calculation of realistic Site Specific LLFs then a default calculation, or default replacement process shall be undertaken.

A default replacement process shall be deemed to have been undertaken if a generic methodology is used where the following applies:

(a) A Site has multiple connections to the Total System and the primary connection is at EHV but there is a subordinate connection that is not connected at EHV, then a generic methodology MAY be used for the subordinate connection (even if a Site specific LLF is used for the Site's primary connection); and

(b) The connection has a capacity of less than or equal to 1MVA

The definition of EHV used for LLF purposes differs from the definition used for defining Designated EHV Properties in the EDCM. The definition used for LLF purposes can be found in our LLF methodology which can be found on the Elexon website[9].

Publication of Line Loss Factor tables

4.6 The LLFs used in Settlement are published on the Elexon Portal[10]. The website contains the LLFs in standard industry data formats and in a summary form. A user guide with details on registering and using the portal is also available.

4.7 BSCP 128 sets out the timetable by which LLFs are submitted and audited. The submission and audit occurs between September and December in the year prior to the LLFs becoming effective. Only after the completion of the audit at the end of December and BSC approval are the final LLFs published.

---

[8] Energy can be lost for technical and non-technical reasons and losses normally occur by heat dissipation through power flowing in conductors and transformers. Losses can also reduce if a Customer's action reduces power flowing in the distribution network. This might happen when a Customer generates electricity and the produced energy is consumed locally.

[9] The following page has links to BSCP128 and to our LLF methodology: http://www.elexon.co.uk/reference/technical-operations/losses/

[10] The Elexon Portal can be accessed from www.elexonportal.co.uk

4.8 At the time that this charging statement is first published, Annex 5 will be intentionally left blank, as this statement is published a complete year before the LLFs have been calculated and audited. Once the final BSCP128 Audit Report has been received, we will issue an updated version of Annex 5 containing the audited LLF values.

4.9 When using the tables in Annex 5, reference should be made to the LLFC allocated to a Non-Migrated MPAN or to the DUoS Tariff ID allocated to a Migrated MPAN to find the appropriate values.

5. Notes for Designated EHV Properties

EDCM network group costs

5.1 A table is provided in the accompanying spreadsheet which shows the underlying Forward Cost Pricing (FCP) network group costs used to calculate the current EDCM charges. This spreadsheet (SHEPD – Schedule of charges and other tables.xlsx) is available to download from our website www.ssen.co.uk.

5.2 These are illustrative of the modelled costs at the time that this statement was published. A new connection will result in changes to current network utilisations which will then form the basis of future prices. The charge determined in this statement will not necessarily be the charge in subsequent years because of the interaction between new and existing network connections and any other changes made to our Distribution System which may affect charges.

Charges for New Designated EHV Properties

5.3 Charges for any new Designated EHV Properties calculated after publication of the current statement will be published on our website in an addendum to that statement as and when necessary. The addendum will include charge information of the type found in Annex 2, and LLFs as found in Annex 5.

5.4 The form of the addendum is detailed in Annex 6 of this statement.

5.5 The new Designated EHV Properties' charges will be added to Annex 2 in the next full statement released.

Charges for Amended Designated EHV Properties

5.6 Where an existing Designated EHV Property connection is modified and energised in the charging year, we may revise our EDCM charges for the modified Designated EHV Property. If revised charges are appropriate, an addendum will be sent to all relevant parties and published as a revised 'Schedule of Charges and Other Tables' spreadsheet on our website www.ssen.co.uk. The modified Designated EHV Property charges will be added to Annex 2 in the next full statement released.

Demand Side Management

5.7 New or existing Designated EHV Property Customers may wish to offer part of their MIC to be interruptible by us (for active network management purposes other than normal planned or unplanned outages) in order to benefit from any reduced DUoS charges calculated using the EDCM.

5.8 Several options exist in which we may agree for some or the entire MIC to be interruptible. Under the EDCM the applicable demand capacity costs would be based on the MIC minus the capacity subject to interruption.

5.9 If you are interested in making part or all of your MIC interruptible as an integral irrevocable feature of a new connection or modification to an existing connection you should in the first instance contact our connections function;

connections@ssen.co.uk

You must make an express statement in your application that you have an interest in some or all of the import capacity being interruptible for active network management purposes.

5.10 If you are proactively interested in voluntarily but revocably offering to make some or all of your existing connection's MIC interruptible you should in the first instance contact us at the address in paragraph 5.9.

6. Electricity Distribution Rebates

6.1 We have neither given nor announced any DUoS rebates to Users in the 12 months preceding the date of publication of this version of the statement.

7. Accounting and Administration Services

7.1 Other than the charges noted below, no Accounting and Administration charges are detailed within this statement. Please refer to our Statement of Miscellaneous Charges for details of our transactional charges and other notices.

7.2 We reserve the right to impose payment default remedies. The remedies are as set out in the DCUSA where applicable or else as detailed in the following paragraph.

7.3 If any invoices that are not subject to a valid dispute remain unpaid on the due date, late payment interest (calculated at Base Rate plus 8%) and administration charges may be imposed.

7.4 Our administration charges are detailed in the following table. These charges are set at a level which is in line with the Late Payment of Commercial Debts Act;

Size of Unpaid Debt	**Late Payment Fee**
Up to £999.99	£40.00
£1,000 to £9,999.99	£70.00
£10,000 or more	£100.00

8. Charges for electrical plant provided ancillary to the grant of Use of System

8.1 No charges for electrical plant provided ancillary to the grant of Use of System are detailed within this statement. Please refer to our Statement of Miscellaneous Charges for details of transactional charges and other notices.

9. Schedule of fixed adders to recover Supplier of Last Resort and Eligible Bad Debt pass-through costs

Supplier of Last Resort

9.1 In accordance with Standard Condition 38B 'Last Resort Supply Payment Claims' ('SLC38B') and Special Condition 6 'Pass-through expenditure' ('SpC6') of our Electricity Distribution Licence, our charges will recover the amount of payments in Regulatory Year t made in response to Last Resort Supply Payment claims.

Eligible Bad Debt

9.2 In accordance with SpC6, our charges will recover the amount of use of system bad debt the Authority has consented to be recovered. This represents use of system bad debt our charges are recovering on behalf of Independent Distribution Network Operators (IDNOs), in accordance with Standard Licence Condition 38C 'Treatment of Valid Bad Debt Claims' ('SLC38C'), and specifically paragraph 4 of that condition.

Tables of Fixed Adders

9.3 Tables listing the charges to recover Supplier of Last Resort and Eligible Bad Debt pass-through costs are published in Annex 7 to this document. The charges are shown for information only and are already included in the final Annex 1 charges.

10. Non-Final Demand Sites

Charges for Non-Final Demand Sites

10.1. A Non-Final Demand Site is charged an import tariff that excludes the residual cost element of charges. If the User wishes for a property to qualify for allocation to these tariffs, then the User must submit certification declaring that the property meets the required criteria as per DCUSA.

Process for submitting certification

10.2. This certification should take the form as set out in Appendix 3 and be submitted to Authorised Capacity using the contact details in 1.13.

We may, at our discretion, request a signed paper certificate from the User, in place of electronic. If requested, paper certification should be posted to the contact details in 1.13.

10.3. Users should undertake reasonable endeavours to ensure the facts attested to in the certification are true. We may request documentation evidencing these endeavours, including where appropriate, photographs of metering positions or system diagrams, following receipt of the certification.

10.4. If we determine that the documentation provided does not sufficiently evidence the undertaking of reasonable endeavours, does not support the facts attested to in the certification, or if no documentation is received, we may at our discretion reject the certification as invalid. If the certification is rejected as invalid, then the property will not qualify as a Non-Final Demand Site.

Application of charges for Non-Final Demand Site

10.5. A property will only be deemed to qualify as a Non-Final Demand Site, and be allocated charges as such, from the date on which we receive valid certification.

10.6. If a property that has previously been certified as a Non-Final Demand Site no longer satisfies the criteria as per DCUSA, then the User must inform us immediately.

10.7. For a property that has been previously certified as a Non-Final Demand Site, we will continue to apply the relevant no residual import tariff without the requirement for further certification, except in any one of the following circumstances:

(a) Where we have reason to believe that the property no longer qualifies as a Non-Final Demand Site; or,

(b) Significant time has passed since the certification was submitted; or,

(c) Where there is a change to the connection characteristics i.e. capacity change.

If such circumstances occur, we may request re-certification of the site, or reject the certification as invalid at our discretion.

10.8. When a property no longer meets the required criteria to qualify as a Non-Final Demand Site, we will change the allocation of charges accordingly from that point.

10.9. Please refer to the section 'Allocation of Charges' if you believe the property has been incorrectly not allocated charges as a Non-Final Demand Site.

11. Back-up Connections

Charges for Back-up Connections

11.1. A Back-up Connection is charged an import tariff that excludes the residual cost element of charges. If the User wishes for a MPAN/MSID to qualify for allocation to these tariffs, then the User must provide evidence necessary to satisfy the definition of Back-up Connection as per DCUSA.

Process for providing evidence

11.2. Users should undertake reasonable endeavours to ensure the facts attested to in the request are true. We may request documentation evidencing these endeavours, including where appropriate, photographs of metering positions or system diagrams.

11.3. If we determine that the documentation provided does not sufficiently evidence the undertaking of reasonable endeavours, does not support the facts attested to in the request, or if no documentation is received, we may at our discretion reject the evidence as invalid. If the evidence is rejected as invalid, then the property will not qualify as a Back-up Connection.

Application of charges for Back-up Connections

11.4. A MPAN/MSID will only be deemed to qualify as a Back-up Connection, and be allocated charges as such, from the first of the month following the date on which we receive valid evidence.

11.5. If a MPAN/MSID that has previously been appointed as a Back-up Connection no longer satisfies the criteria as per DCUSA, then the User must inform us immediately.

11.6. For a MPAN/MSID that has been previously certified as a Back-up Connection, we will continue to apply the relevant no residual import tariff without the requirement for further certification, except in any one of the following circumstances:

(a) Where we have reason to believe that the MPAN/MSID no longer qualifies as a Back-up Connection; or

(b) Significant time has passed since the evidence was submitted; or

(c) Where there is a change to the connection characteristics i.e. capacity change.

If such circumstances occur, we may request evidence to be provided again for the site, or reject the evidence as invalid at our discretion.

11.7. When a MPAN/MSID no longer meets the required criteria to qualify as a Back-up Connection, we will change the allocation of charges accordingly from that point.

11.8. Please refer to the section 'Allocation of Charges' if you believe the MPAN/MSID has been incorrectly not allocated charges as a Back-up Connection.

Appendix 1 – Glossary

1.1. The following definitions, which can extend to grammatical variations and cognate expressions, are included to aid understanding:

Term	Definition
All-the-way Charge	A charge that is applicable to an end user rather than an LDNO. An end user in this context is a Supplier/User who has a registered MPAN or MSID and is using the Distribution System to transport energy on behalf of a Customer.
Back-up Connection	As defined in DCUSA Schedule 32.
Balancing and Settlement Code (BSC)	The BSC contains the governance arrangements for electricity balancing and settlement in Great Britain. An overview is available from https://www.elexon.co.uk/bsc-and-codes/balancing-settlement-code/
Balancing and Settlement Code Procedure (BSCP)	A document of that title, as established or adopted and from time to time modified by the Panel in accordance with The Code, setting out procedures to be complied with (by Parties, Party Agents, BSC Agents, BSCCo, the Panel and others) in, and other matters relating to, the implementation of The Code;
Common Distribution Charging Methodology (CDCM)	The CDCM used for calculating charges to Designated Properties as required by standard licence condition 13A of the Electricity Distribution Licence.
Connection Agreement	An agreement between an LDNO and a Customer which provides that the Customer has the right for its connected installation to be and remain directly or indirectly connected to that LDNO's Distribution System.
Central Volume Allocation (CVA)	As defined in the BSC.
Connection Type	Defines the physical connection as one of four valid types for metered supplies: 'W' Whole Current; 'L' Low Voltage (LV) Current Transformer; 'H' High Voltage (HV) Current Transformer; or 'E' Extra High Voltage (EHV) Current Transformer (E). It will also include a value of 'U' for unmetered connections.
Customer	A person to whom a User proposes to supply, or for the time being supplies, electricity through an exit point, or from who, a User or any relevant exempt Supplier, is entitled to recover charges, compensation or an account of profits in respect of electricity supplied through an exit point; or A person from whom a User purchases, or proposes to purchase, electricity, at an entry point (who may from time to time be supplied with electricity as a Customer of that User (or another electricity Supplier) through an exit point).
Designated EHV Properties	As defined in standard condition 13B of the Electricity Distribution Licence.

<table>
<tr><th>Term</th><th>Definition</th></tr>
<tr><td>Designated Properties</td><td>As defined in standard condition 13A of the Electricity Distribution Licence.</td></tr>
<tr><td>Distribution Connection and Use of System Agreement (DCUSA)</td><td>The DCUSA is a multi-party contract between the licensed electricity distributors, suppliers, generators and Offshore Transmission Owners of Great Britain.
It is a requirement that all licensed electricity distributors and suppliers become parties to the DCUSA.</td></tr>
<tr><td>Distributor IDs</td><td>These are unique IDs that can be used, with reference to the MPAN, to identify your LDNO. The charges for other network operators can be found on their website.
<table>
<tr><th>ID</th><th>Distribution Service Area</th><th>Company</th></tr>
<tr><td>10</td><td>East of England</td><td>UK Power Networks</td></tr>
<tr><td>11</td><td>East Midlands</td><td>Western Power Distribution</td></tr>
<tr><td>12</td><td>London</td><td>UK Power Networks</td></tr>
<tr><td>13</td><td>Merseyside and North Wales</td><td>Scottish Power</td></tr>
<tr><td>14</td><td>Midlands</td><td>Western Power Distribution</td></tr>
<tr><td>15</td><td>Northern</td><td>Northern Powergrid</td></tr>
<tr><td>16</td><td>North Western</td><td>Electricity North West</td></tr>
<tr><td>17</td><td>Scottish Hydro Electric (and embedded networks in other areas)</td><td>Scottish Hydro Electric Power Distribution plc</td></tr>
<tr><td>18</td><td>South Scotland</td><td>Scottish Power</td></tr>
<tr><td>19</td><td>South East England</td><td>UK Power Networks</td></tr>
<tr><td>20</td><td>Southern Electric (and embedded networks in other areas)</td><td>Southern Electric Power Distribution plc</td></tr>
<tr><td>21</td><td>South Wales</td><td>Western Power Distribution</td></tr>
<tr><td>22</td><td>South Western</td><td>Western Power Distribution</td></tr>
<tr><td>23</td><td>Yorkshire</td><td>Northern Powergrid</td></tr>
<tr><td>24</td><td>All</td><td>Independent Power Networks</td></tr>
<tr><td>25</td><td>All</td><td>ESP Electricity</td></tr>
<tr><td>26</td><td>All</td><td>Last Mile Electricity Ltd</td></tr>
<tr><td>27</td><td>All</td><td>The Electricity Network Company Ltd</td></tr>
<tr><td>29</td><td>All</td><td>Harlaxton Energy Networks</td></tr>
<tr><td>30</td><td>All</td><td>Peel Electricity Networks Ltd</td></tr>
<tr><td>31</td><td>All</td><td>UK Power Distribution Ltd</td></tr>
<tr><td>32</td><td>All</td><td>Energy Assets Networks Limited</td></tr>
<tr><td>33</td><td>All</td><td>Eclipse Power Networks Ltd</td></tr>
<tr><td>34</td><td>All</td><td>Murphy Power Distribution Ltd</td></tr>
<tr><td>35</td><td>All</td><td>Fulcrum Electricity Assets Ltd</td></tr>
<tr><td>36</td><td>All</td><td>Vattenfall Networks Ltd</td></tr>
<tr><td>37</td><td>All</td><td>Forbury Assets Limited</td></tr>
<tr><td>38</td><td>All</td><td>Indigo Power Limited</td></tr>
</table></td></tr>
<tr><td>Distribution Network Operator (DNO)</td><td>An electricity distributor that operates one of the 14 distribution services areas and in whose Electricity Distribution Licence the requirements of Section B of the standard conditions of that licence have effect.</td></tr>
</table>

Term	Definition
Distribution Services Area	The area specified by the Gas and Electricity Markets Authority within which each DNO must provide specified distribution services.
Distribution System	The system consisting (wholly or mainly) of electric lines owned or operated by an authorised distributor that is used for the distribution of electricity from: • Grid Supply Points or generation sets or other entry points to the points of delivery to: • Customers or Users or any transmission licensee in its capacity as operator of that licensee's transmission system or the Great Britain (GB) transmission system and includes any remote transmission assets (owned by a transmission licensee within Scotland) that are operated by that authorised distributor and any electrical plant, electricity meters, and metering equipment owned or operated by it in connection with the distribution of electricity, but does not include any part of the GB transmission system.
DUoS Tariff ID	An identifier assigned to an SVA metering system which is used to assign the use of system charges for Migrated MPANs.
EHV Distribution Charging Methodology (EDCM)	The EDCM used for calculating charges to Designated EHV Properties as required by standard licence condition 13B of the Electricity Distribution Licence.
Electricity Distribution Licence	The Electricity Distribution Licence granted or treated as granted pursuant to section 6(1) of the Electricity Act 1989.
Electricity Distributor	Any person who is authorised by an Electricity Distribution Licence to distribute electricity.
Embedded Network	An electricity Distribution System operated by an LDNO and embedded within another Distribution System.
Embedded Network report for DUoS – aggregated data	A report of data by IDNO's DUoS Tariff ID and by IDNO providing counts of MPANs and units consumed.
Engineering Recommendation P2/7	A document of the Energy Networks Association, which defines minimum planning standards for security of supply and is referred to in Standard Licence Condition 24 of the Electricity Distribution Licence.
Entry Point	A boundary point at which electricity is exported onto a Distribution System from a connected installation or from another Distribution System, not forming part of the total system (boundary point and total system having the meaning given to those terms in the BSC).
Exit Point	A point of connection at which a supply of electricity may flow from the Distribution System to the Customer's installation or User's installation or the Distribution System of another person.
Extra-High Voltage (EHV)	Nominal voltages of 22kV and above.
Final Demand Site	As defined in DCUSA Schedule 32

Term	Definition
Gas and Electricity Markets Authority (GEMA)	As established by the Utilities Act 2000.
Grid Supply Point (GSP)	A metered connection between the electricity transmission system and the licensee's Distribution System at which electricity flows to or from the Distribution System.
GSP group	A distinct electrical system that is supplied from one or more GSPs for which total supply into the GSP group can be determined for each half hour.
High Voltage (HV)	Nominal voltages of at least 1kV and less than 22kV.
Industry Standing Data (ISD)	Industry Standing Data (ISD) is the reference data used in Settlement processes under MHHS.
Intermittent Generation	Defined in DCUSA Schedule 16 as a generation plant where the energy source of the prime mover cannot be made available on demand, in accordance to the definitions in Engineering Recommendation P2/7.
Invalid Settlement Combination	A Settlement combination that is not recognised as a valid combination in market domain data - see https://www.elexonportal.co.uk/MDDVIEWER.
kVA	Kilovolt ampere.
kVArh	Kilovolt ampere reactive hour.
kW	Kilowatt.
kWh	Kilowatt hour (equivalent to one "unit" of electricity).
LDSO report for DUoS – aggregated data	A report of data by DUoS Tariff ID and Supplier providing counts of MPANs and units consumed
Licensed Distribution Network Operator (LDNO)	The holder of a Licence to distribute electricity.
Line Loss Factor (LLF)	The factor that is used in Settlement to adjust the metering system volumes to take account of losses on the Distribution System.
Line Loss Factor Class (LLFC)	An identifier assigned to an SVA metering system which is used to assign the LLF and use of system charges for Non-Migrated MPANs.
Load Factor	$= \frac{annual\ consumption\ (kWh)}{maximum\ demand\ (kW) \times hours\ in\ year}$
Low Voltage (LV)	Nominal voltages below 1kV.
LV Substation Tariff	This tariff applies as described in DCUSA Schedule 16 Section 141, Note 3, where the metering CT is within, or abutting to the HV/LV substation transformation chamber.
Market Domain Data (MDD)	MDD is a central repository of reference data available to all Users involved in Settlement. It is essential to the operation of SVA trading arrangements. More information can be found here Market Domain Data - Elexon BSC.

Term	Definition
Market Segment	Market Segment is derived from the Meter Type and Connection Type using a defined set of business rules. There are three Market Segments: Smart and Non-Smart (Including Smart Meters with Settlement Period level data available, Smart Meters with only Register Readings available and Non-Smart Meters with Register Readings); Advanced (which are Advanced Metering Systems with Settlement Period level data available); Unmetered
Market-Wide HH Settlement (MHHS)	Market-wide Half-Hourly Settlement (MHHS) is a key enabler of the flexibility to support the transition to Net Zero. The MHHS Programme will contribute to a more cost-effective electricity system, encouraging more flexible use of energy and helping consumers lower their bills.
Maximum Export Capacity (MEC)	The MEC of apparent power expressed in kVA that has been agreed can flow through the entry point to the Distribution System from the Customer's installation as specified in the connection agreement.
Maximum Import Capacity (MIC)	The MIC of apparent power expressed in kVA that has been agreed can flow through the exit point from the Distribution System to the Customer's installation as specified in the connection agreement.
Measurement Class	A classification of Metering Systems used in the BSC which indicates how consumption is measured, i.e.: • Measurement Class A – non-half-hourly metering equipment; • Measurement Class B – non-half-hourly unmetered supplies; • Measurement Class C – half-hourly metering equipment at or above 100kW premises; • Measurement Class D – half-hourly unmetered supplies; • Measurement Class E – half-hourly metering equipment below 100kW premises, and from 5 November 2015, with current transformer; • Measurement Class F – half hourly metering equipment at below 100kW premises with current transformer or whole current, and at domestic premises; and • Measurement Class G – half hourly metering equipment at below 100kW premises with whole current and not at domestic premises.
Meter Timeswitch Code (MTC)	MTCs are three digit codes allowing Suppliers to identify the metering installed in Customers' premises. They indicate whether the meter is single or multi-rate, pre-payment or credit, or whether it is 'related' to another meter. Further information can be found in MDD.
Metering Point	The point at which electricity that is exported to or imported from the licensee's Distribution System is measured, is deemed to be measured, or is intended to be measured and which is registered pursuant to the provisions of the REC. For the purposes of this statement, GSPs are not 'Metering Points'.
Metering Point Administration Number (MPAN)	A number relating to a Metering Point under the REC.

Term	Definition
Metering System	Particular commissioned metering equipment installed for the purposes of measuring the quantities of exports and/or imports at the exit point or entry point.
Metering System Identifier (MSID)	MSID is a term used throughout the BSC and its subsidiary documents and has the same meaning as MPAN as used under the REC.
Migrated MPANs	Migration refers to the process by which MPANs are migrated from the legacy arrangements to the new MHHS arrangements.
Master Registration Agreement (MRA)	The Master Registration Agreement (MRA) provides a governance mechanism to manage the processes established between electricity suppliers and distribution companies to enable electricity suppliers to transfer customers. It includes terms for the provision of Metering Point Administration Services (MPAS) Registrations. The MRA was superseded by the Retail Energy Code (REC) on 1st September 2021.
Nested Networks	This refers to a situation where there is more than one level of Embedded Network and therefore nested Distribution Systems between LDNOs (e.g. host DNO→primary nested DNO→ secondary nested DNO→Customer).
Non-Final Demand (NFD) Site	As defined in DCUSA Schedule 32.
Non-Intermittent Generation	Defined in DCUSA Schedule 16 as a generation plant where the energy source of the prime mover can be made available on demand, in accordance to the definitions in Engineering Recommendation P2/7.
Non-Migrated MPANs	This refers to the status when an MPAN is on the legacy arrangements and before migrating under MHHS.
Ofgem	Office of Gas and Electricity Markets – Ofgem is governed by GEMA and is responsible for the regulation of the distribution companies.
Profile Class (PC)	A categorisation applied to NHH MPANs and used in settlement to group Customers with similar consumption patterns to enable the calculation of consumption profiles.
Retail Energy Code (REC)	A code that consolidates the switching arrangements historically set out in the Master Registration Agreement (MRA) and the Supply Point Administration Agreement (SPAA) (for gas) into one dual-fuel code. Provides a governance mechanism to manage the processes established between electricity suppliers and distribution companies to enable electricity suppliers to transfer customers. It includes terms for the provision of Metering Point Administration Services (MPAS) Registrations.
Settlement	The determination and settlement of amounts payable in respect of charges (including reconciling charges) in accordance with the BSC.
Settlement Class (SC)	The combination of Profile Class, Line Loss Factor Class, Time Pattern Regime and Standard Settlement Configuration, by Supplier within a GSP group and used for Settlement.
Standard Settlement Configuration (SSC)	A standard metering configuration relating to a specific combination of Time Pattern Regimes.
Supercustomer	The method of billing Users for use of system on an aggregated basis, grouping together consumption and standing charges for all similar NHH metered Customers or aggregated HH metered Customers. Also referred to as Aggregate billing.

Term	Definition
Supercustomer DUoS Report	A report of profiled data by Settlement Class providing counts of MPANs and units consumed.
Supplier	An organisation with a supply licence responsible for electricity supplied to and/or exported from a Metering Point.
Supplier Volume Allocation (SVA)	As defined in the BSC.
Time Pattern Regime (TPR)	The pattern of switching behaviour through time that one or more meter registers follow.
Unmetered Supplies	Exit points deemed to be suitable as unmetered supplies as permitted in the Electricity (Unmetered Supply) Regulations 2001 and where operated in accordance with BSC procedure 520[11].
Use of System Charges	Charges which are applicable to those parties which use the Distribution System.
User	Someone that has a use of system agreement with the DNO e.g. a Supplier, generator or other LDNO.

[11] Balancing and Settlement Code Procedures are available from http://www.elexon.co.uk/pages/bscps.aspx

Appendix 2 - Guidance notes[12]

Background

1.1. The electricity bill from your Supplier contains an element of charge to cover electricity distribution costs. This distribution charge covers the cost of operating and maintaining a safe and reliable Distribution System that forms the 'wires' that transport electricity between the national transmission system and end users such as homes and businesses. Our Distribution System includes overhead lines, underground cables, as well as substations and transformers.

1.2. In most cases, your Supplier is invoiced for the distribution charge and this is normally part of your total bill. In some cases, for example business users, the Supplier may pass through the distribution charge as an identifiable line item on the electricity bill.

1.3. Where electricity is generated at a premises your Supplier may receive a credit for energy that is exported on to the Distribution System. These credits are intended to reflect that the exported generation may reduce the need for traditional demand led reinforcement of the Distribution System.

1.4. Understanding your distribution charges could help you reduce your costs and increase your credits. This is achieved by understanding the components of the charge to help you identify whether there may be opportunities to change the way you use the Distribution System.

Meter point administration

1.5. We are responsible for managing the electricity supply points that are connected to our Distribution System. Typically every supply point is identified by a Meter Point Administration Number (MPAN). A few supply points may have more than one MPAN depending on the metering configuration (e.g. a school which may have an MPAN for the main supply and an MPAN for catering).

1.6. The full MPAN is a 21 digit number, preceded by an 'S' and includes supplementary data. The MPAN applicable to a supply point is found on the electricity bill from your Supplier. This number enables you to establish who your electricity distributor is, details of the characteristics of the supply and importantly the distribution charges that are applicable to your premises.

1.7. The 21-digit number is normally presented in two sections as shown in the following diagram. The top section is supplementary data which gives information about the characteristics of supply, while the bottom 'core' is the unique identifier.

Full MPAN diagram

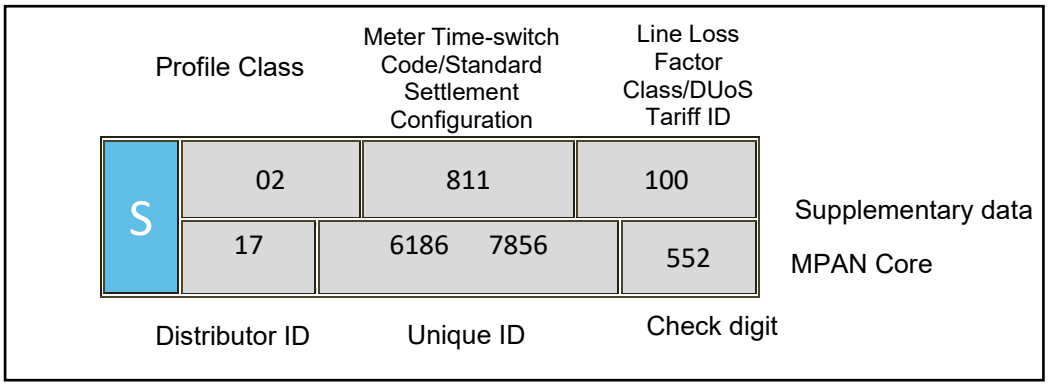

1.8. Generally, you will only need to know the Distributor ID and LLFC/DUoS Tariff ID to identify the distribution charges for your premises. However, there are some premises where charges are specific to that site. In these instances the charges are identified by the MPAN core. The Distributor ID for SHEPD is 17. Other Distributor IDs can be referenced in the Glossary.

[12] These guidance notes are provided for additional information and do not form part of the application of charges.

1.9. Additionally it can be useful to understand the profile class provided in the supplementary data. The profile class will be a number between 00 and 08. The following list provides details of the allocation of profile classes to types of Customers:

- '01' – Domestic Customers with unrestricted supply
- '02' – Domestic Customers with restricted load, for example off-peak heating
- '03' – Non-domestic Customers with unrestricted supply
- '04' – Non-domestic Customers with restricted load, for example off-peak heating
- '05' – Non-domestic maximum demand Customers with a Load Factor of less than 20%
- '06' – Non-domestic maximum demand Customers with a Load Factor between 20% and 30%
- '07' – Non-domestic maximum demand Customers with a Load Factor between 30% and 40%
- '08' – Non-domestic maximum demand Customers with a Load Factor over 40% or non-half-hourly metered generation Customers
- '00' – Half-hourly metered demand and generation Customers (including all Migrated MPANs)

1.10. Unmetered Supplies will be allocated to profile class 01, 08 or 00 depending on the type of load or the measurement method of the load.

1.11. The allocation of the profile class will affect your charges for Non-Migrated MPANs. If you feel that you have been allocated the wrong profile class, please contact your Supplier as they are responsible for this.

Your charges

1.12. All distribution charges that relate to our Distributor ID 17 and to premises within our Distribution Services Area are provided in this statement. For distribution charges which relate to our Distributor ID 17 and to premises connected to an 'out of area' network, please refer to the statement referenced in paragraph 2.74.

1.13. You can identify your charges by referencing your LLFC/DUoS Tariff ID, from Annex 1. If the MPAN is for a Designated EHV Property then the charges will be found in Annex 2. In a few instances, the charges may be contained in Annex 3 or Annex 6. When identifying charges in Annex 2, please note that some LLFCs/DUoS Tariff IDs have more than one charge. In this instance you will need to select the correct charge by cross referencing with the MPAN core provided in the table.

1.14. Once you have identified which charge structure applies to your MPAN then you will be able to calculate an estimate of your distribution charge using the calculator provided in the spreadsheet 'Schedule of charges and other tables' found in the sheet called 'Charge Calculator'. This spreadsheet can be downloaded from www.ssen.co.uk.

Reducing your charges

1.15. The most effective way to reduce your energy charges is to reduce your consumption by switching off or using more energy efficient appliances. However, there are also other potential opportunities to reduce your distribution charges; for example, it may be beneficial to shift demand or generation to a better time period. Demand use is likely to be cheaper outside the peak periods and generation credits more beneficial during peak periods, although the ability to directly benefit will be linked to the structure of your supply charges.

1.16. The calculator mentioned above provides the opportunity to establish a forecast of the change in distribution charges that could be achieved if you are able to change any of the consumption related inputs.

Reactive power and reactive power charges

1.17. Reactive power is a separately charged component of connections that are half-hourly metered. Reactive power charges are generally avoidable if 'best practice' design of the properties' electrical installation has been provided in order to maintain a power factor between 0.95 and unity at the Metering Point.

1.18. Reactive Power (kVArh) is the difference between working power (active power measured in kW) and total power consumed (apparent power measured in kVA). Essentially it is a measure of how efficiently electrical power is transported through an electrical installation or a Distribution System.

1.19. Power flowing with a power factor of unity results in the most efficient loading of the Distribution System. Power flowing with a power factor of less than 0.95 results in much higher losses in the Distribution System, a need to potentially provide higher capacity electrical equipment and consequently a higher bill for you the consumer. A comparatively small improvement in power factor can bring about a significant reduction in losses since losses are proportional to the square of the current.

1.20. Different types of electrical equipment require some 'reactive power' in addition to 'active power' in order to work effectively. Electric motors, transformers and fluorescent lighting, for example, may produce poor power factors due to the nature of their inductive load. However, if good design practice is applied then the poor power factor of appliances can be corrected as near as possible to source. Alternatively, poor power factor can be corrected centrally near to the meter.

1.21. There are many advantages that can be achieved by correcting poor power factor. These include: reduced energy bills through lower reactive charges, lower capacity charges and reduced power consumption and reduced voltage drop in long cable runs.

Site-specific EDCM charges

1.22. A site classified as a Designated EHV Property is subject to a locational based charging methodology (referred to as EDCM) for higher voltage network users. Distributors use one of two approved approaches; Long Run Incremental Cost (LRIC) or Forward Cost Pricing (FCP); we use the FCP. The EDCM will apply to Customers connected at Extra-High Voltage or connected at High Voltage and metered at a high voltage substation.

1.23. EDCM charges and credits are site-specific, reflecting the degree to which the local and higher voltage networks have the capacity to serve more demand without the need to upgrade the electricity infrastructure. The conditions for eligibility of generators for credits within the EDCM are specified in the applicable charging methodology. Generators that benefit from an exemption from UoS charges for generation, or that are intermittent in accordance to the definitions in Engineering Recommendation P2/7 and that cannot maintain production for a continuous period of several weeks, are unlikely to be eligible for EDCM credits. In any event, eligibility for EDCM credits depends on a site-specific assessment of whether the generation can be considered to have a contribution to security of supply under Engineering Recommendation P2/7.

1.24. The charges under the EDCM comprise of the following individual components:

a) **Fixed charge (pence/MPAN/day)** - This charge recovers operational costs associated with those connection assets that are provided for the 'sole' use of the Customer and a residual amount to ensure recovery of our regulated allowed revenue.

b) **Capacity charge (pence/kVA/day)** -This charge comprises the relevant FCP component, the National Grid Electricity Transmission cost and other regulated costs.

Capacity charges are levied on the MIC, MEC, and any exceeded capacity. You may wish to review your MIC or MEC periodically to ensure it remains appropriate for your needs as you may be paying for more capacity than you require. If you wish to make changes, contact us via the details in paragraph 1.13.

The FCP cost is locational and reflects our assessment of future network reinforcement necessary at the voltage of connection (local) and beyond at all higher voltages (remote) relevant to the Customer's connection. This results in the allocation of higher costs, in more capacity congested parts of the network reflecting the greater likelihood of future reinforcement in these areas and the allocation of lower costs in less congested parts of the network. The local FCP cost is included in the capacity charge.

Our regulated costs include direct and indirect operational costs. The capacity charge recovers these costs using the Customer usage profile and the relevant assets being used to transport electricity between the source substation and Customer's Metering Point.

c) **Super-red unit charge (pence/kWh**) - This charge recovers the remote FCP component. The charge is positive for import and negative for export which means you can either reduce your charges by minimising consumption or increasing export at those times. The charge is applied to consumption during the Super-red time period as detailed in Annex 2.

1.25. Future charge rates may be affected by consumption during the Super-red time period, therefore reducing consumption in the Super-red time period may be beneficial.

1.26. **Reactive Power** - The EDCM does not include a separate charge component for any reactive power flows (kVAr) for either demand or generation. However, the EDCM charges do reflect the effect on the network of the Customer's power factor, for example, unit charges can increase if your site power factor is poor (lower than 0.95). Improving your site's power factor will also reduce the maximum demand (kVA) for the same power consumed in kW thus providing scope to reduce your agreed capacity requirements.

Additional Notes

Domestic Aggregated (Related MPAN) and Non-Domestic Aggregated (Related MPAN) are supplementary, off-peak, tariffs to their standard, Domestic Aggregated and Non-Domestic Aggregated tariffs, respectively. Related MPAN, off-peak, terms are only available to Metering Points that are already on such terms and where: a) the Customer retains the original off-peak equipment and the circuits from which the off-peak supply is taken are separated from all other circuits; b) the function of the off-peak equipment is not duplicated by other equipment connected to the other circuits; and c) "off-peak equipment" means appliances such as thermal storage heaters, storage water heaters or other equipment as agreed by SHEPD
Generally, Domestic DUoS tariffs are available only to premises: a) used exclusively as a single private residence; or b) comprising more than one private residence where the estimated maximum demand of the supply does not exceed 25 kW

Appendix 3 – Non-Final Demand Site Certificate

A certificate set out in the form of the example shown below should be submitted to confirm that a site qualifies as a Non-Final Demand Site.

Non-Final Demand Site Certificate of Compliance

This is to certify that the Metering System listed below qualifies as compliant with the criteria of a Non-Final Demand Site, for the purposes of Use of System charges, and that:

The property is a Single Site at which either or both Electricity Storage and/or Electricity Generation occurs (whether the facility(ies) at the site are operating or being commissioned, repaired, or decommissioned), and that:

a) has an export MPAN and an import MPAN with associated metering equipment which only measures export from Electricity Storage and/or Electricity Generation and import for or directly relating to Electricity Storage and/or Electricity Generation (and not export from another source and/or import for another activity; and
   - if registered in an MPAS Registration System, is subject to certification from a Supplier Party that the site meets the criteria in paragraph (a) above, which certificate has been provided to the DNO/IDNO Party; or
   - if registered in CMRS, is subject to certification from the Customer (or its CVA Registrant) that the site meets the criteria in paragraph (a) above, which certificate has been provided to the DNO/IDNO Party.

For the purposes of this declaration, the term Non-Final Demand Site has the meaning given to it in the DCUSA.

Metering System Site Address:

Qualifying Import MPAN/MSID(s)	Qualifying Export MPAN/MSID(s)

I declare that I understand the qualification requirements and certify that the above Metering System meets the criteria of a Non-Final Demand Site.

Authorised signatory:

Name and designation:

On behalf of company:

Date:

Annex 1 - Schedule of Charges for use of the Distribution System by LV and HV Designated Properties, and Unmetered Supplies

Scottish Hydro Electric Power Distribution plc - Effective from 1st April 2026 - Final LV and HV charges

Time Bands for LV and HV Designated Properties			
Time periods	**Red Time Band**	**Amber Time Band**	**Green Time Band**
Monday to Friday (Including Bank Holidays) All Year	16:00 - 19:00		
Monday to Friday (Including Bank Holidays) All Year		07:00 - 16:00 19:00 - 21:00	
Monday to Friday (Including Bank Holidays) All Year			00:00 - 07:00 21:00 - 24:00
Saturday and Sunday All Year		12:00 - 20:00	00:00 - 12:00 20:00 - 24:00
Notes	All the above times are in UK Clock time		

Time Bands for Unmetered Properties			
	Black Time Band	**Yellow Time Band**	**Green Time Band**
Monday to Friday (Including Bank Holidays) March to October Inclusive		07:00 - 21:00	
Monday to Friday (Including Bank Holidays) November to February Inclusive	16:00 - 19:00	07:00 - 16:00 19:00 - 21:00	
Monday to Friday (Including Bank Holidays) April to March Inclusive			00:00 - 07:00 21:00 - 24:00
Saturday and Sunday All Year		12:00 - 20:00	00:00 - 12:00 20:00 - 24:00
Notes	All the above times are in UK Clock time		

Tariff name	Open LLFCs / DUoS Tariff IDs	PCs	Red/black unit charge p/kWh	Amber/yellow unit charge p/kWh	Green unit charge p/kWh	Fixed charge p/MPAN/day	Capacity charge p/kVA/day	Exceeded capacity charge p/kVA/day	Reactive power charge p/kVArh	Closed LLFCs / DUoS Tariff IDs
Domestic Aggregated or CT with Residual	**15, 18, 25, 27, 33, 100-101, 105-106, 110-111, 120-121, 125-128, 300-301, 305, 320-321, 325, 506**	**0, 1, 2**	**11.447**	**3.993**	**0.857**	**11.77**				

Tariff name	Open LLFCs / DUoS Tariff IDs	PCs	Red/black unit charge p/kWh	Amber/yellow unit charge p/kWh	Green unit charge p/kWh	Fixed charge p/MPAN/day	Capacity charge p/kVA/day	Exceeded capacity charge p/kVA/day	Reactive power charge p/kVArh	Closed LLFCs / DUoS Tariff IDs
Domestic Aggregated (Related MPAN)	16, 19, 26, 28, 102, 122, 302, 322	2	11.447	3.993	0.857					17, 20, 104, 124, 304, 324
Non-Domestic Aggregated or CT No Residual	34, P60, P65, P70, P00, R35, R40, P05, P10, P15, P20, P25, P30, P35, P40, R45, P45, P50, P55, R50, P75, R55, R60, R65, R70, R75, R80, R85, R90, R95, S05, S10	0, 3, 4, 5-8	13.842	4.829	1.037	27.65				S00, S15, S20
Non-Domestic Aggregated or CT Band 1	35, P61, P66, P71, P01, R36, R41, P06, P11, P16, P21, P26, P31, P36, P41, R46, P46, P51, P56, R51, P76, R56, R61, R66, R71, R76, R81, R86, R91, R96, S06, S11	0, 3, 4, 5-8	13.842	4.829	1.037	25.24				S01, S16, S21

Tariff name	Open LLFCs / DUoS Tariff IDs	PCs	Red/black unit charge p/kWh	Amber/yellow unit charge p/kWh	Green unit charge p/kWh	Fixed charge p/MPAN/day	Capacity charge p/kVA/day	Exceeded capacity charge p/kVA/day	Reactive power charge p/kVArh	Closed LLFCs / DUoS Tariff IDs
Non-Domestic Aggregated or CT Band 2	36, P62, P67, P72, P02, R37, R42, P07, P12, P17, P22, P27, P32, P37, P42, R47, P47, P52, P57, R52, P77, R57, R62, R67, R72, R77, R82, R87, R92, R97, S07, S12	0, 3, 4, 5-8	13.842	4.829	1.037	13.62				S02, S17, S22
Non-Domestic Aggregated or CT Band 3	37, P63, P68, P73, P03, R38, R43, P08, P13, P18, P23, P28, P33, P38, P43, R48, P48, P53, P58, R53, P78, R58, R63, R68, R73, R78, R83, R88, R93, R98, S08, S13	0, 3, 4, 5-8	13.763	4.749	0.957	0.00				S03, S18, S23
Non-Domestic Aggregated or CT Band 4	38, P64, P69, P74, P04, R39, R44, P09, P14, P19, P24, P29, P34, P39, P44, R49, P49, P54, P59, R54, P79, R59, R64, R69, R74, R79, R84, R89, R94, R99, S09, S14	0, 3, 4, 5-8	13.389	4.375	0.583	0.00				S04, S19, S24
Non-Domestic Aggregated (related MPAN)	22, 24, 30, 152, 172, 352, 372	4	13.842	4.829	1.037					155, 175, 355, 375

Tariff name	Open LLFCs / DUoS Tariff IDs	PCs	Red/black unit charge p/kWh	Amber/yellow unit charge p/kWh	Green unit charge p/kWh	Fixed charge p/MPAN/day	Capacity charge p/kVA/day	Exceeded capacity charge p/kVA/day	Reactive power charge p/kVArh	Closed LLFCs / DUoS Tariff IDs
LV Site Specific No Residual	P80	0	8.560	2.832	0.683	73.17	13.83	13.83	0.442	
LV Site Specific Band 1	P81	0	8.223	2.496	0.346	0.00	13.83	13.83	0.442	
LV Site Specific Band 2	P82	0	8.049	2.321	0.299	0.00	13.83	13.83	0.442	
LV Site Specific Band 3	P83	0	7.948	2.221	0.299	0.00	13.83	13.83	0.442	
LV Site Specific Band 4	P84	0	7.850	2.122	0.299	0.00	13.83	13.83	0.442	
LV Sub Site Specific No Residual	P85	0	3.819	0.970	0.384	185.47	17.97	17.97	0.176	
LV Sub Site Specific Band 1	P86	0	3.483	0.634	0.047	112.30	17.97	17.97	0.176	
LV Sub Site Specific Band 2	P87	0	3.309	0.460	0.000	112.30	17.97	17.97	0.176	
LV Sub Site Specific Band 3	P88	0	3.208	0.359	0.000	112.30	17.97	17.97	0.176	
LV Sub Site Specific Band 4	P89	0	3.109	0.260	0.000	112.30	17.97	17.97	0.176	
HV Site Specific No Residual	P90	0	1.970	0.525	0.323	821.93	20.10	20.10	0.103	
HV Site Specific Band 1	P91	0	1.970	0.525	0.323	111.58	20.10	20.10	0.103	
HV Site Specific Band 2	P92	0	1.463	0.018	0.000	0.00	20.10	20.10	0.103	
HV Site Specific Band 3	P93	0	0.657	0.000	0.000	0.00	20.10	20.10	0.103	
HV Site Specific Band 4	P94	0	0.000	0.000	0.000	0.00	20.10	20.10	0.103	

Tariff name	Open LLFCs / DUoS Tariff IDs	PCs	Red/black unit charge p/kWh	Amber/yellow unit charge p/kWh	Green unit charge p/kWh	Fixed charge p/MPAN/day	Capacity charge p/kVA/day	Exceeded capacity charge p/kVA/day	Reactive power charge p/kVArh	Closed LLFCs / DUoS Tariff IDs
Unmetered Supplies	800-805	0, 1 or 8	27.663	8.970	6.846					
LV Generation Aggregated	951	0 or 8	-8.397	-2.929	-0.629	0.00				
LV Sub Generation Aggregated	952	0 or 8	-7.268	-2.471	-0.562	0.00				
LV Generation Site Specific	1-2, 909	0	-8.397	-2.929	-0.629	0.00			0.502	
LV Generation Site Specific no RP charge	9-10	0	-8.397	-2.929	-0.629	0.00				
LV Sub Generation Site Specific	3-4	0	-7.268	-2.471	-0.562	0.00			0.384	
LV Sub Generation Site Specific no RP charge	11-12	0	-7.268	-2.471	-0.562	0.00				
HV Generation Site Specific	5-6, 910	0	-3.372	-0.857	-0.339	1073.07			0.329	
HV Generation Site Specific no RP charge	13-14	0	-3.372	-0.857	-0.339	1073.07				

Annex 2 - Schedule of Charges for use of the Distribution System by Designated EHV Properties (including LDNOs with Designated EHV Properties/end-users)

Note: The list of MPANs / MSIDs provided may be incomplete; the DNO reserves the right to apply the listed charges to any other MPANs / MSIDs associated with the site.

Scottish Hydro Electric Power Distribution plc - Effective from 1st April 2026 - Final Designated EDCM charges

Time Periods for Designated EHV Properties	
Time periods	**Super Red Time Band**
Monday to Friday (Including Bank Holidays) November to February Inclusive	16:00 - 19:00
Notes	All the above times are in UK Clock time

Import LLFC / DUoS Tariff ID	Import MPANs/MSIDs	Export LLFC / DUoS Tariff ID	Export MPANs/MSIDs	Name	Residual Charging Band	Import Super Red unit charge (p/kWh)	Import fixed charge (p/day)	Import capacity charge (p/kVA/day)	Import exceeded capacity charge (p/kVA/day)	Export Super Red unit charge (p/kWh)	Export fixed charge (p/day)	Export capacity charge (p/kVA/day)	Export exceeded capacity charge (p/kVA/day)
595	1712385815400			Tariff 1	2	0.000	662.89	3.66	3.66	0.000	0.00	0.00	0.00
596	1700051251844			Tariff 2	1	0.000	1256.99	2.32	2.32	0.000	0.00	0.00	0.00
597	1711602345053			Tariff 3	1	0.000	662.88	7.90	7.90	0.000	0.00	0.00	0.00
598	1717121416604	530	1700052708460	Tariff 4	1	1.422	308.60	0.88	0.88	0.000	354.28	0.05	0.05
560	1700051737559	520	1700051732541	Tariff 5		0.000	5.14	1.06	1.06	0.000	616.24	0.05	0.05
560	1700051737568	520	1700051732550	Tariff 6		0.000	7.81	1.06	1.06	0.000	613.57	0.05	0.05
562	1700051741068	522	1700051734177	Tariff 8		0.000	200.65	1.06	1.06	0.000	420.73	0.05	0.05

Import LLFC / DUoS Tariff ID	Import MPANs/MSIDs	Export LLFC / DUoS Tariff ID	Export MPANs/MSIDs	Name	Residual Charging Band	Import Super Red unit charge (p/kWh)	Import fixed charge (p/day)	Import capacity charge (p/kVA/day)	Import exceeded capacity charge (p/kVA/day)	Export Super Red unit charge (p/kWh)	Export fixed charge (p/day)	Export capacity charge (p/kVA/day)	Export exceeded capacity charge (p/kVA/day)
562	1700051740988	522	1700051737372	Tariff 9		0.000	167.56	1.06	1.06	0.000	453.82	0.05	0.05
562	1700051740960	522	1700051734121	Tariff 10		0.000	18.55	1.06	1.06	0.000	602.83	0.05	0.05
563	1700051737647	523	1700051733944	Tariff 11		0.000	301.90	1.06	1.06	0.000	319.48	0.05	0.05
564	1700051765732	524	1700051765723	Tariff 12		0.000	1007.40	0.97	0.97	0.000	0.00	0.00	0.00
566	1700051741110	526	1700051730386	Tariff 14		0.000	0.00	1.06	1.06	0.000	0.00	0.05	0.05
567	1700052157576	527	1700052157585	Tariff 15	1	0.000	19.04	1.01	1.01	0.000	275.51	0.05	0.05
569	1710056910505			Tariff 16	1	0.000	662.88	14.66	14.66	0.000	0.00	0.00	0.00
713	1712380671009	913	1700051748160	Tariff 17		0.000	3.69	0.64	0.64	0.000	0.00	0.00	0.00
714	1712398153703, 1700051612511	914	1700051731539, 1700051731548	Tariff 18	4	0.000	7794.53	1.45	1.45	0.000	12220.73	0.05	0.05
8707	8707	8707	8707	Tariff 20	1	0.000	0.50	2.06	2.06	0.000	0.00	0.00	0.00
717	1700051126888	917	1700051731282	Tariff 21		0.000	43.62	0.97	0.97	0.000	1322.47	0.05	0.05
718	1700051955969	918	1700051955940	Tariff 22		0.000	17.01	1.39	1.39	0.000	0.00	0.00	0.00
637	1700051778208	837	1700051771578	Tariff 23	1	0.000	10.28	1.18	1.18	0.000	0.00	0.00	0.00
8328	8328	8328	8328	Tariff 24	1	0.000	67.31	1.79	1.79	0.000	30964.00	0.05	0.05
722	1700051742780	922	1700051732133	Tariff 25		0.000	8.68	2.23	2.23	0.000	5012.04	0.05	0.05
8696	8696	8696	8696	Tariff 26	1	0.000	4.79	1.35	1.35	0.000	0.00	0.00	0.00
723	1700051976550	923	1700051976560	Tariff 27		0.000	6.77	1.41	1.41	0.000	0.00	0.00	0.00
724	1700052029865	924	1700052029856	Tariff 28		0.000	7.47	1.25	1.25	0.000	0.00	0.00	0.00
725	1700051728590	925	1700051780216	Tariff 29		0.000	73.15	0.93	0.93	0.000	0.00	0.00	0.00
726	1700051703898	926	1700051822559	Tariff 30		0.000	8.14	1.00	1.00	0.000	0.00	0.00	0.00
8699	8699	8699	8699	Tariff 31		0.000	131.54	1.84	1.84	0.000	0.00	0.00	0.00
8699	8699	8699	8699	Tariff 32		0.000	131.54	1.88	1.88	0.000	0.00	0.00	0.00
727	1700051782729	927	1700051782710	Tariff 33		0.000	5.76	1.25	1.25	0.000	0.00	0.00	0.00

Import LLFC / DUoS Tariff ID	Import MPANs/MSIDs	Export LLFC / DUoS Tariff ID	Export MPANs/MSIDs	Name	Residual Charging Band	Import Super Red unit charge (p/kWh)	Import fixed charge (p/day)	Import capacity charge (p/kVA/day)	Import exceeded capacity charge (p/kVA/day)	Export Super Red unit charge (p/kWh)	Export fixed charge (p/day)	Export capacity charge (p/kVA/day)	Export exceeded capacity charge (p/kVA/day)
730	1700051741990	930	1700051732286	Tariff 35		0.000	18.83	1.44	1.44	0.000	1732.53	0.05	0.05
731	1700051584955	931	1700051732374	Tariff 36		0.000	10.39	1.19	1.19	0.000	0.00	0.00	0.00
732	1700052249980	932	-	Tariff 37		0.000	13.36	1.36	1.36	0.000	3205.96	0.05	0.05
787	1700051754020	987	1700051754011	Tariff 38		0.000	21.78	0.82	0.82	0.000	0.00	0.00	0.00
8688	8688	8688	8688	Tariff 39		0.000	1.88	0.97	0.97	0.000	1046.40	0.05	0.05
735	1700051754369	935	1700051775660	Tariff 40		0.000	5.54	1.28	1.28	0.000	0.00	0.00	0.00
736	1700051754401	936	1700051775670	Tariff 41		0.000	5.54	1.63	1.63	0.000	0.00	0.00	0.00
737	1700051742034	937	1700051732310	Tariff 42		0.000	7.55	1.76	1.76	0.000	0.00	0.00	0.00
738	1700051741077	938	1700051734195	Tariff 43		0.000	43.74	0.97	0.97	0.000	1312.11	0.05	0.05
739	1700051741086	939	1700051734200	Tariff 44		0.000	43.74	0.97	0.97	0.000	1312.11	0.05	0.05
740	1700051754313	940	1700051781520	Tariff 45	1	0.000	61.83	0.95	0.95	0.000	0.00	0.00	0.00
741	1700051737600	941	1700051733536	Tariff 46		0.000	133.30	0.97	0.97	0.000	1388.55	0.05	0.05
742	1700051737610	942	1700051733689	Tariff 47		0.000	5.29	0.97	0.97	0.000	1111.77	0.05	0.05
743	1700051746952	943	1700051746961	Tariff 48		0.000	3.68	1.56	1.56	0.000	0.00	0.00	0.00
744	1700051957664	944	1700051957655	Tariff 49		0.000	77.15	0.98	0.98	0.000	0.00	0.00	0.00
745	1700052002748	945	1700052002710	Tariff 50		0.000	33.53	1.17	1.17	0.000	0.00	0.00	0.00
746	1700052002720	946	1700052002739	Tariff 51		0.000	75.90	1.18	1.18	0.000	0.00	0.00	0.00
748	1700051956466	948	1700051956457	Tariff 52		0.000	4.12	1.78	1.78	0.000	0.00	0.00	0.00
749	1700051622272	949	1700051732151	Tariff 53	1	0.000	134.98	1.53	1.53	0.000	1524.91	0.05	0.05
753	1700051965043	953	1700051965052	Tariff 54		0.000	7.99	1.59	1.59	0.000	2350.28	0.05	0.05
754	1700051740923	954	1700051734103	Tariff 55		0.000	0.71	0.97	0.97	0.000	177.17	0.05	0.05
756	1700051770412	956	1700051770403	Tariff 57		0.000	6.52	0.97	0.97	0.000	0.00	0.00	0.00
758	1700051742897	958	1700051732417	Tariff 58		0.000	54.03	0.97	0.97	0.000	0.00	0.00	0.00
589	1700051737629	529	1700051733759	Tariff 59		0.000	0.53	0.97	0.97	0.000	197.39	0.05	0.05

Import LLFC / DUoS Tariff ID	Import MPANs/MSIDs	Export LLFC / DUoS Tariff ID	Export MPANs/MSIDs	Name	Residual Charging Band	Import Super Red unit charge (p/kWh)	Import fixed charge (p/day)	Import capacity charge (p/kVA/day)	Import exceeded capacity charge (p/kVA/day)	Export Super Red unit charge (p/kWh)	Export fixed charge (p/day)	Export capacity charge (p/kVA/day)	Export exceeded capacity charge (p/kVA/day)
761	1700051751562	961	1700051751553	Tariff 60		0.000	34.37	0.97	0.97	0.000	1426.17	0.05	0.05
8694	8694	8694	8694	Tariff 61		0.000	39.09	2.19	2.19	0.000	0.00	0.00	0.00
8694	8694	8694	8694	Tariff 62		0.000	39.01	2.50	2.50	0.000	0.00	0.00	0.00
762	1700051737638	962	1700051733810	Tariff 63		0.000	32.34	0.81	0.81	0.000	3363.78	0.05	0.05
763	1700052250169	963	1700052250178	Tariff 64		0.000	20.47	0.97	0.97	0.000	2046.64	0.05	0.05
767	1700051737683	967	1700051734015	Tariff 65		0.000	35.16	0.97	0.97	0.000	5625.11	0.05	0.05
769	1700051738092	969	1700051734033	Tariff 67		0.000	1.00	0.97	0.97	0.000	314.91	0.05	0.05
8687	8687	8687	8687	Tariff 68	1	0.000	1.53	0.78	0.78	0.000	321.49	0.05	0.05
772	1700051740950	972	1700051734896	Tariff 69		0.000	12.94	0.97	0.97	0.000	1617.08	0.05	0.05
773	1700051742744	973	1700051731690	Tariff 70		0.000	26.91	1.42	1.42	0.000	1614.87	0.05	0.05
774	1700051742708	974	1700051731501	Tariff 71		0.000	24.26	1.32	1.32	0.000	1617.52	0.05	0.05
633	1700052410683	833	1700052410692	Tariff 72		0.000	211.01	1.09	1.09	0.000	40873.19	0.05	0.05
775	1700051857055	975	1700051857046	Tariff 73		0.000	527.77	0.83	0.83	0.000	0.00	0.00	0.00
777	1700052048593	977	1700052048584	Tariff 74		0.000	82.76	0.97	0.97	0.000	2755.90	0.05	0.05
779	1700051740890	979	1700051734070	Tariff 75		0.000	177.74	0.97	0.97	0.000	4621.34	0.05	0.05
783	1700051740905	983	1700051734089	Tariff 79		0.000	2.85	0.97	0.97	0.000	555.68	0.05	0.05
784	1700051740914	984	1700051734098	Tariff 80		0.000	2.85	0.97	0.97	0.000	555.68	0.05	0.05
		985	1700051744928	Tariff 81		0.000	0.00	0.00	0.00	0.000	4435.60	0.05	0.05
786	1700051742070	986	1700051732356	Tariff 82		0.000	592.52	1.03	1.03	0.000	0.00	0.00	0.00
8689	8689	8689	8689	Tariff 83		0.000	4.67	0.97	0.97	0.000	1869.06	0.05	0.05
8689	8689	8689	8689	Tariff 84		0.000	5.32	0.97	0.97	0.000	2128.00	0.05	0.05
789	1700052121427	989	1700052121436	Tariff 85		0.000	4.66	1.59	1.59	0.000	1470.41	0.05	0.05
791	1700052276956	991	1700052276983	Tariff 86		0.000	10.03	1.17	1.17	0.000	970.66	0.05	0.05
8740	8740	8740	8740	Tariff 87	1	0.000	7.82	4.76	4.76	0.000	7006.17	0.05	0.05

Import LLFC / DUoS Tariff ID	Import MPANs/MSIDs	Export LLFC / DUoS Tariff ID	Export MPANs/MSIDs	Name	Residual Charging Band	Import Super Red unit charge (p/kWh)	Import fixed charge (p/day)	Import capacity charge (p/kVA/day)	Import exceeded capacity charge (p/kVA/day)	Export Super Red unit charge (p/kWh)	Export fixed charge (p/day)	Export capacity charge (p/kVA/day)	Export exceeded capacity charge (p/kVA/day)
607	1700052336027	807	1700052336036	Tariff 88		0.000	37.87	1.16	1.16	0.000	2896.85	0.05	0.05
608	1700052371769	808	1700052371750	Tariff 89		0.000	762.78	0.75	0.75	0.000	0.00	0.00	0.00
729	1700051877993	929	1700051877984	Tariff 90		0.000	96.74	1.10	1.10	0.000	0.00	0.00	0.00
609	1700052335929	809	1700052335938	Tariff 91		0.000	38.07	0.97	0.97	0.000	1842.55	0.05	0.05
610	1700052383462	810	1700052383471	Tariff 93		0.000	13.54	0.97	0.97	0.000	1428.32	0.05	0.05
611	1700052250016	811	1700052250025	Tariff 94		0.000	17.04	1.08	1.08	0.000	1344.19	0.05	0.05
612	1700052333968	812	1700052333977, 1700052755726	Tariff 95		0.000	23.23	1.12	1.12	0.000	5749.17	0.05	0.05
613	1700052409544	813	1700052409553	Tariff 96		0.000	14.78	1.49	1.49	0.000	1400.99	0.05	0.05
614	1700052409562	814	1700052409571	Tariff 97		0.000	45.04	1.24	1.24	0.000	4323.80	0.05	0.05
615	1700052279362	815	1700052279353	Tariff 98		0.000	85.67	5.54	5.54	0.000	1439.20	0.05	0.05
704	1712407523002			Tariff 100	2	0.000	1158.57	2.99	2.99	0.000	0.00	0.00	0.00
705	1714107179708			Tariff 101	1	0.000	1951.89	4.89	4.89	0.000	0.00	0.00	0.00
706	1716846112651, 1700052948191			Tariff 102	2	0.000	1961.38	2.80	2.80	0.000	0.00	0.00	0.00
707	1717159001300			Tariff 103	1	0.000	1217.85	1.91	1.91	0.000	0.00	0.00	0.00
708	1717249710102			Tariff 104	1	0.000	1961.37	2.67	2.67	0.000	0.00	0.00	0.00
710	1717491993500, 1727491993507	855	1700052708503	Tariff 106	2	0.000	2102.05	3.44	3.44	0.000	274.37	0.05	0.05
685	1711953043404			Tariff 108	1	0.000	3760.15	2.91	2.91	0.000	0.00	0.00	0.00
686	1712524882004			Tariff 109	2	0.000	11618.37	3.27	3.27	0.000	0.00	0.00	0.00
687	1711843426252			Tariff 110	1	0.000	1175.40	0.88	0.88	0.000	0.00	0.00	0.00
688	1711929555006			Tariff 111	1	0.000	9428.72	1.78	1.78	0.000	0.00	0.00	0.00
638	1700051744440	838	1700051744459	Tariff 112		0.000	247.05	0.65	0.65	0.000	374.32	0.05	0.05
689	1735033416884			Tariff 122	2	0.000	662.89	2.61	2.61	0.000	0.00	0.00	0.00
689	1745033416880			Tariff 123		0.000	662.88	2.91	2.91	0.000	0.00	0.00	0.00

Import LLFC / DUoS Tariff ID	Import MPANs/MSIDs	Export LLFC / DUoS Tariff ID	Export MPANs/MSIDs	Name	Residual Charging Band	Import Super Red unit charge (p/kWh)	Import fixed charge (p/day)	Import capacity charge (p/kVA/day)	Import exceeded capacity charge (p/kVA/day)	Export Super Red unit charge (p/kWh)	Export fixed charge (p/day)	Export capacity charge (p/kVA/day)	Export exceeded capacity charge (p/kVA/day)
689	1725033416888			Tariff 124		0.000	662.88	2.53	2.53	0.000	0.00	0.00	0.00
689	1715033416881			Tariff 125		0.000	662.88	2.54	2.54	0.000	0.00	0.00	0.00
690	1715033416924			Tariff 126		0.000	47625.86	2.81	2.81	0.000	0.00	0.00	0.00
690	1725033416920			Tariff 127	3	0.000	6513.81	1.66	1.66	0.000	0.00	0.00	0.00
616	1700052338353	816	1700052338362	Tariff 128		0.000	33.34	1.91	1.91	0.000	6980.66	0.05	0.05
617	1700052478830	817	1700052478840	Tariff 129		0.000	45.56	0.97	0.97	0.000	1837.44	0.05	0.05
618	1700052478868	818	1700052478877	Tariff 130		0.000	117.96	0.98	0.98	0.000	2854.70	0.05	0.05
619	1700052478812	819	1700052478821	Tariff 131		0.000	52.38	1.01	1.01	0.000	2112.84	0.05	0.05
620	1700052464740	820	1700052464759	Tariff 132	1	0.000	660.57	2.68	2.68	0.000	1688.13	0.05	0.05
621	1700052372178	821	1700052372187	Tariff 133		0.000	108.33	1.00	1.00	0.000	4333.23	0.05	0.05
622	1700052288701	822	1700052288696	Tariff 134		0.000	115.11	0.76	0.76	0.000	0.00	0.00	0.00
623	1700052434197	823	1700052434211	Tariff 135	1	0.000	10.62	1.25	1.25	0.000	1593.46	0.05	0.05
625	1700052427320	825	1700052427330	Tariff 136		0.000	114.17	0.97	0.97	0.000	2283.36	0.05	0.05
626	1700052468489	826	1700052468498	Tariff 137		0.000	11.88	1.40	1.40	0.000	0.00	0.00	0.00
766	1700051744430	966	1700051744421	Tariff 138		0.000	285.66	0.64	0.64	0.000	5284.75	0.05	0.05
793	1700052446280	8710	8710	Tariff 140		0.000	24.13	12.29	12.29	0.000	24539.82	0.05	0.05
630	1700052708187	830	1700052708196	Tariff 141	1	0.000	435.40	1.46	1.46	0.000	1502.14	0.05	0.05
634	1700052479268	834	1700052479277	Tariff 143		0.000	6.11	1.90	1.90	0.000	1404.92	0.05	0.05
635	1700052632341	835	1700052632350	Tariff 144		0.000	66.06	1.14	1.14	0.000	8103.47	0.05	0.05
790	1700052250248	990	1700052250284	Tariff 146		0.000	33.14	0.99	0.99	0.000	2406.24	0.05	0.05
644	1700051778192	844	1700051778183	Tariff 147	1	0.000	58.15	0.57	0.57	0.000	0.00	0.00	0.00
646	1700052537803	846	1700052537812	Tariff 149		0.000	4.04	5.64	5.64	0.000	976.65	0.05	0.05
648	1700052909174	848	1700052909183	Tariff 150		0.000	9.10	10.29	10.29	0.000	1001.23	0.05	0.05
8715	8715	8715	8715	Tariff 151		0.000	28.79	8.82	8.82	0.000	15171.90	0.05	0.05

Import LLFC / DUoS Tariff ID	Import MPANs/MSIDs	Export LLFC / DUoS Tariff ID	Export MPANs/MSIDs	Name	Residual Charging Band	Import Super Red unit charge (p/kWh)	Import fixed charge (p/day)	Import capacity charge (p/kVA/day)	Import exceeded capacity charge (p/kVA/day)	Export Super Red unit charge (p/kWh)	Export fixed charge (p/day)	Export capacity charge (p/kVA/day)	Export exceeded capacity charge (p/kVA/day)
652	1700052674875	852	1700052674884	Tariff 153		0.000	120.31	0.97	0.97	0.000	12031.43	0.05	0.05
653	1700052577772	853	1700052577781	Tariff 154		0.000	24.47	1.10	1.10	0.000	3377.16	0.05	0.05
654	1700052635991	854	1700052636008	Tariff 155		0.000	14.64	1.22	1.22	0.000	966.05	0.05	0.05
795	1700052588250	859	1700052588296	Tariff 157		0.000	211.52	1.01	1.01	0.000	769.17	0.05	0.05
796	1700052844312	860	1700052844321	Tariff 158		0.000	16.60	1.47	1.47	0.000	3816.98	0.05	0.05
797	1700052585286	8717	8717	Tariff 159		0.000	100.74	1.64	1.64	0.000	12592.95	0.05	0.05
658	1700052525366	863	1700052525375	Tariff 161		0.000	127.21	2.15	2.15	0.000	31802.43	0.05	0.05
655	1700052524098	864	1700052524103	Tariff 162		0.000	7.30	1.41	1.41	0.000	1453.51	0.05	0.05
659	1700052500724	865	1700052500733	Tariff 163		0.000	86.31	2.87	2.87	0.000	21318.98	0.05	0.05
661	1700052601770	867	1700052601812	Tariff 165		0.000	35.51	1.30	1.30	0.000	3805.18	0.05	0.05
624	1700052765487	824	1700052765496	Tariff 166		0.000	36.47	0.97	0.97	0.000	1677.66	0.05	0.05
664	1700052793182	870	1700052793207	Tariff 170		0.000	248.58	0.98	0.98	0.000	4302.43	0.05	0.05
665	1700052556300	871	1700052556319	Tariff 171		0.000	33.20	1.03	1.03	0.000	1527.24	0.05	0.05
778	1700051768167	978	1700051768158	Tariff 172		0.000	45.35	1.59	1.59	0.000	2664.08	0.05	0.05
667	1700052479212	873	1700052479221	Tariff 174		0.000	114.49	1.06	1.06	0.000	5456.46	0.05	0.05
691	1700051747715			Tariff 177		0.000	1313.26	2.56	2.56	0.000	0.00	0.00	0.00
691	1700051747733			Tariff 178		0.000	1313.26	2.02	2.02	0.000	0.00	0.00	0.00
		528	1700051731194	Tariff 179		0.000	0.00	0.00	0.00	0.000	621.38	0.05	0.05
		528	1700051731185	Tariff 180		0.000	0.00	0.00	0.00	0.000	621.38	0.05	0.05
		528	1700051731176	Tariff 181		0.000	0.00	0.00	0.00	0.000	621.38	0.05	0.05
		528	1700051731120	Tariff 182		0.000	0.00	0.00	0.00	0.000	621.38	0.05	0.05
		528	1700051731088	Tariff 183		0.000	0.00	0.00	0.00	0.000	621.38	0.05	0.05
		528	1700051731200	Tariff 184		0.000	0.00	0.00	0.00	0.000	621.38	0.05	0.05
		528	1700051730846	Tariff 185		0.000	0.00	0.00	0.00	0.000	621.38	0.05	0.05

Import LLFC / DUoS Tariff ID	Import MPANs/MSIDs	Export LLFC / DUoS Tariff ID	Export MPANs/MSIDs	Name	Residual Charging Band	Import Super Red unit charge (p/kWh)	Import fixed charge (p/day)	Import capacity charge (p/kVA/day)	Import exceeded capacity charge (p/kVA/day)	Export Super Red unit charge (p/kWh)	Export fixed charge (p/day)	Export capacity charge (p/kVA/day)	Export exceeded capacity charge (p/kVA/day)
		528	1700051730873	Tariff 186		0.000	0.00	0.00	0.00	0.000	621.38	0.05	0.05
		528	1700051730882	Tariff 187		0.000	0.00	0.00	0.00	0.000	621.38	0.05	0.05
		843	1700051730891	Tariff 188		0.000	0.00	0.00	0.00	0.000	1313.26	0.05	0.05
		843	1700051730943	Tariff 189		0.000	0.00	0.00	0.00	0.000	1313.26	0.05	0.05
		843	1700051730916	Tariff 190		0.000	0.00	0.00	0.00	0.000	1313.26	0.05	0.05
668	1700052336009	874	1700052336018	Tariff 191		0.000	56.72	5.70	5.70	0.000	2869.81	0.05	0.05
669	1700052611323	875	1700052611332	Tariff 192	1	0.000	124.80	2.44	2.44	0.000	14976.61	0.05	0.05
780	1700052910658	980	1700052910667	Tariff 194		0.000	449.67	5.79	5.79	0.000	22461.11	0.05	0.05
673	1700052767128	879	1700052767137	Tariff 196		0.000	19.21	0.97	0.97	0.000	1617.07	0.05	0.05
647	1700052610348	847	1700052610357	Tariff 197		0.000	9.84	1.19	1.19	0.000	1131.88	0.05	0.05
583	1712392333485			Tariff 200	1	0.000	1300.27	7.80	7.80	0.000	0.00	0.00	0.00
675	1700052707945	881	1700052707963	Tariff 202	1	0.000	946.99	1.82	1.82	0.000	2904.12	0.05	0.05
676	1700052445729	882	1700052445738	Tariff 203		0.000	9.27	1.05	1.05	0.000	1483.34	0.05	0.05
677	1700052638539	883	1700052638548	Tariff 204		0.000	67.35	1.89	1.89	0.000	13335.89	0.05	0.05
679	1700052643929	885	1700052643938	Tariff 206		0.000	11.05	1.11	1.11	0.000	2540.76	0.05	0.05
680	1700052636150	886	1700052636160	Tariff 207		0.000	12.84	0.98	0.98	0.000	1027.14	0.05	0.05
681	1700052601413	887	1700052601469	Tariff 208		0.000	5.90	1.02	1.02	0.000	0.00	0.00	0.00
682	1700052604567	888	1700052604576	Tariff 209		0.000	20.49	1.24	1.24	0.000	2582.18	0.05	0.05
692	1700052619439	891	1700052619448	Tariff 212		0.000	386.07	1.03	1.03	0.000	12354.34	0.05	0.05
694	1700052643593	893	1700052643609	Tariff 214		0.000	536.91	1.00	1.00	0.000	7629.73	0.05	0.05
8720	8720	8720	8720	Tariff 215		0.000	118.66	0.77	0.77	0.000	12231.19	0.05	0.05
696	1700052667450	895	1700052667460	Tariff 216		0.000	33.40	0.97	0.97	0.000	1536.53	0.05	0.05
697	1700052667423	896	1700052667432	Tariff 217		0.000	32.04	1.07	1.07	0.000	1537.89	0.05	0.05
656	1700052613757	856	1700052613766	Tariff 221		0.000	32.62	2.92	2.92	0.000	8808.28	0.05	0.05

Import LLFC / DUoS Tariff ID	Import MPANs/MSIDs	Export LLFC / DUoS Tariff ID	Export MPANs/MSIDs	Name	Residual Charging Band	Import Super Red unit charge (p/kWh)	Import fixed charge (p/day)	Import capacity charge (p/kVA/day)	Import exceeded capacity charge (p/kVA/day)	Export Super Red unit charge (p/kWh)	Export fixed charge (p/day)	Export capacity charge (p/kVA/day)	Export exceeded capacity charge (p/kVA/day)
577	1700052218990, 1700052219007			Tariff 228	4	0.000	49038.92	0.55	0.55	0.000	0.00	0.00	0.00
8719	8719	8719	8719	Tariff 230	1	0.000	418.83	0.67	0.67	0.000	24350.72	0.05	0.05
581	1700052632379	908	1700052632388	Tariff 232		0.000	62.90	1.21	1.21	0.000	4151.45	0.05	0.05
631	1700052750685	831	1700052750694	Tariff 234		0.000	101.61	1.06	1.06	0.000	1219.30	0.05	0.05
636	1700052757705	836	1700052757714	Tariff 235		0.000	6.57	2.69	2.69	0.000	1314.33	0.05	0.05
771	1700052979793	971	1700052979809	Tariff 237		0.000	108.29	1.06	1.06	0.000	5198.10	0.05	0.05
8707	8707	8707	8707	Tariff 238	1	0.000	4.38	0.64	0.64	0.000	0.00	0.00	0.00
750	1700052546774			Tariff 239	1	0.000	3805.64	1.28	1.28	0.000	0.00	0.00	0.00
628	1700052708201	828	1700052708210	Tariff 240		0.000	128.54	1.01	1.01	0.000	0.00	0.00	0.00
781	1700052765469	981	1700052765478	Tariff 241		0.000	2362.68	1.07	1.07	0.000	14176.09	0.05	0.05
639	1700052751331	839	1700052751340	Tariff 242	1	0.000	273.60	0.80	0.80	0.000	4719.72	0.05	0.05
8722	8722	8722	8722	Tariff 246	1	0.000	1510.56	0.60	0.60	0.000	55890.78	0.05	0.05
570	1700052616916	970	1700052616925	Tariff 249		0.000	597.22	1.16	1.16	0.000	59722.40	0.05	0.05
576	1700052791343	876	1700052791361	Tariff 251		0.000	153.18	0.98	0.98	0.000	2604.13	0.05	0.05
580	1700052906944	880	1700052906953	Tariff 252		0.000	14.25	0.97	0.97	0.000	2137.34	0.05	0.05
640	1700052750408	840	1700052750417	Tariff 253	1	0.000	33.35	5.38	5.38	0.000	1534.21	0.05	0.05
629	1700052730856	829	1700052730865	Tariff 254		0.000	8.39	0.97	0.97	0.000	1414.49	0.05	0.05
8741	8741	8741	8741	Tariff 255	1	0.000	275.78	1.05	1.05	0.000	62052.28	0.05	0.05
641	1700052708586	841	1700052708595	Tariff 256		0.000	51.21	0.97	0.97	0.000	2304.46	0.05	0.05
782	1700052966039	982	1700052966048	Tariff 257		0.000	102.97	0.79	0.79	0.000	9678.78	0.05	0.05
590	1700053150075	531	1700053150084	Tariff 258		0.000	52.61	1.47	1.47	0.000	12099.51	0.05	0.05
645	1700052867514	845	1700052867523	Tariff 259		0.000	5.56	1.15	1.15	0.000	1667.90	0.05	0.05
649	1700052944504	849	1700052944513	Tariff 260		0.000	4.64	4.14	4.14	0.000	1532.56	0.05	0.05

Import LLFC / DUoS Tariff ID	Import MPANs/MSIDs	Export LLFC / DUoS Tariff ID	Export MPANs/MSIDs	Name	Residual Charging Band	Import Super Red unit charge (p/kWh)	Import fixed charge (p/day)	Import capacity charge (p/kVA/day)	Import exceeded capacity charge (p/kVA/day)	Export Super Red unit charge (p/kWh)	Export fixed charge (p/day)	Export capacity charge (p/kVA/day)	Export exceeded capacity charge (p/kVA/day)
792	1700053043267	992	1700053043276	Tariff 262		0.000	12.11	0.65	0.65	0.000	968.58	0.05	0.05
734	1700052967219	934	1700052967246	Tariff 263		0.000	38.30	2.15	2.15	0.000	3133.58	0.05	0.05
693	1700052810094	933	1700052810100	Tariff 265		0.000	237.06	1.08	1.08	0.000	2370.48	0.05	0.05
561	1700053292294	521	1700053292285	Tariff 266		0.000	22.32	1.35	1.35	0.000	1488.31	0.05	0.05
695	1700052348254	995	1700052348263	Tariff 269		0.000	1271.65	1.00	1.00	0.000	28612.21	0.05	0.05
764	1700053001080	964	1700053001090	Tariff 273		0.000	455.50	1.01	1.01	0.000	33083.34	0.05	0.05
627	1700052434620	827	1700052434639	Tariff 274		0.000	139.70	1.17	1.17	0.000	5202.26	0.05	0.05
698	1700052878000	898	1700052878010	Tariff 277		0.000	42.39	1.00	1.00	0.000	1548.88	0.05	0.05
666	1700053065048	996	1700053065057	Tariff 282		0.000	8.44	1.18	1.18	0.000	1776.96	0.05	0.05
642	1700052768380	842	1700052768390	Tariff 286		0.000	9.22	2.05	2.05	0.000	1383.67	0.05	0.05
699	1700052826698	899	1700052826917	Tariff 287		0.000	9.73	1.05	1.05	0.000	4474.52	0.05	0.05
8727	8727	8727	8727	Tariff 288	1	0.000	413.88	1.22	1.22	0.000	70951.44	0.05	0.05
702	1700052857534	902	1700052857543	Tariff 289		0.000	10.42	1.45	1.45	0.000	1279.65	0.05	0.05
712	1700052859903	912	1700052859912	Tariff 290		0.000	6.06	0.97	0.97	0.000	2423.37	0.05	0.05
794	1700052887690	994	1700052887706	Tariff 291		0.000	20.12	2.48	2.48	0.000	1341.36	0.05	0.05
716	1700052889721	916	1700052889730	Tariff 292		0.000	1.86	1.44	1.44	0.000	978.83	0.05	0.05
719	1700052866733	919	1700052866742	Tariff 295		0.000	2.79	2.58	2.58	0.000	662.64	0.05	0.05
765	1700052930014	965	1700052930023	Tariff 296		0.000	19.41	1.61	1.61	0.000	2724.50	0.05	0.05
585	1700053106800	8755	8755	Tariff 299	1	0.000	10.14	1.16	1.16	0.000	970.54	0.05	0.05
578	1700052918959	535	1700052918968	Tariff 300		0.000	203.32	1.59	1.59	0.000	2277.21	0.05	0.05
776	1700052976686	976	1700052976700	Tariff 302		0.000	172.05	0.97	0.97	0.000	6130.44	0.05	0.05
657	1700052983390	857	1700052983406	Tariff 303		0.000	14.50	0.97	0.97	0.000	1525.79	0.05	0.05
594	1700053110676	533	1700053110685	Tariff 311		0.000	534.29	0.66	0.66	0.000	5474.24	0.05	0.05
747	1700052947453	947	1700052947620	Tariff 312		0.000	23.99	0.98	0.98	0.000	2065.34	0.05	0.05

Import LLFC / DUoS Tariff ID	Import MPANs/MSIDs	Export LLFC / DUoS Tariff ID	Export MPANs/MSIDs	Name	Residual Charging Band	Import Super Red unit charge (p/kWh)	Import fixed charge (p/day)	Import capacity charge (p/kVA/day)	Import exceeded capacity charge (p/kVA/day)	Export Super Red unit charge (p/kWh)	Export fixed charge (p/day)	Export capacity charge (p/kVA/day)	Export exceeded capacity charge (p/kVA/day)
757	1700052947791	957	1700052947807	Tariff 317		0.000	40.77	1.01	1.01	0.000	1502.12	0.05	0.05
Y15	1700060138588	Z15	1700060138597	Tariff 318		0.000	4.17	1.66	1.66	0.000	1449.55	0.05	0.05
Y13	1700060110875	Z13	1700060110884	Tariff 319		0.000	110.80	1.50	1.50	0.000	8058.25	0.05	0.05
672	1700052944531	872	1700052944540	Tariff 320		0.000	5.08	0.97	0.97	0.000	1693.14	0.05	0.05
768	1700052959218	968	1700052959227	Tariff 322		0.000	25.54	1.66	1.66	0.000	1343.98	0.05	0.05
674	1700053106829	894	1700053106838	Tariff 327		0.000	6.35	1.15	1.15	0.000	974.33	0.05	0.05
Y07	1700060059786	Z07	1700060059795	Tariff 330		0.000	15.85	2.45	2.45	0.000	1918.14	0.05	0.05
728	1700052988877	878	1700052988886	Tariff 331		0.000	25.81	1.02	1.02	0.000	954.88	0.05	0.05
751	1700052988840	911	1700052988859	Tariff 334		0.000	29.16	0.97	0.97	0.000	1841.97	0.05	0.05
720	1700052866760	920	1700052866770	Tariff 340		0.000	10.27	2.73	2.73	0.000	1699.59	0.05	0.05
8752	8752	8756	8756	Tariff 342		0.000	24.21	1.06	1.06	0.000	2401.40	0.05	0.05
788	1700053037510	988	1700053037529	Tariff 348		0.000	8.16	2.01	2.01	0.000	1431.33	0.05	0.05
Y01	1700060123633	Z01	1700060123642	Tariff 350		0.000	173.75	1.12	1.12	0.000	7471.23	0.05	0.05
721	1700052954655	921	1700052954664	Tariff 355		0.000	2.31	1.34	1.34	0.000	1215.43	0.05	0.05
798	1700052963083	998	1700052963092	Tariff 356		0.000	20.08	41.69	41.69	0.000	960.61	0.05	0.05
670	1700053127721	8738	8738	Tariff 357		0.000	20.67	1.16	1.16	0.000	4663.27	0.05	0.05
759	1700052976792	959	1700052976808	Tariff 358		0.000	6.30	0.97	0.97	0.000	1326.46	0.05	0.05
671	1700052982909	901	1700052982927	Tariff 359		0.000	2.79	2.58	2.58	0.000	662.64	0.05	0.05
785	1700053058797	905	1700053058802	Tariff 362		0.000	537.67	1.06	1.06	0.000	24195.24	0.05	0.05
643	1700053092158			Tariff 363	1	0.000	1375.45	5.87	5.87	0.000	0.00	0.00	0.00
760	1700053127730	8737	8737	Tariff 364		0.000	53.39	0.71	0.71	0.000	3683.81	0.05	0.05
572	1700052996655	862	1700052996664	Tariff 365		0.000	19.27	1.27	1.27	0.000	1420.21	0.05	0.05
8743	8743	8743	8743	Tariff 367	1	0.000	16.07	1.12	1.12	0.000	964.61	0.05	0.05
591	1700053137232	8757	8757	Tariff 369		0.000	348.61	0.89	0.89	0.000	31453.60	0.05	0.05

Import LLFC / DUoS Tariff ID	Import MPANs/MSIDs	Export LLFC / DUoS Tariff ID	Export MPANs/MSIDs	Name	Residual Charging Band	Import Super Red unit charge (p/kWh)	Import fixed charge (p/day)	Import capacity charge (p/kVA/day)	Import exceeded capacity charge (p/kVA/day)	Export Super Red unit charge (p/kWh)	Export fixed charge (p/day)	Export capacity charge (p/kVA/day)	Export exceeded capacity charge (p/kVA/day)
663	1700053029244	897	1700053029253	Tariff 372		0.000	179.76	1.01	1.01	0.000	17408.48	0.05	0.05
571	1700053276195	861	1700053276200	Tariff 375		0.000	14.16	1.03	1.03	0.000	1415.80	0.05	0.05
683	1700053048070	907	1700053048089, 1700053217214, 1700053217205	Tariff 377		0.000	11.51	1.41	1.41	0.000	1413.75	0.05	0.05
733	1700053036241	997	1700053036250	Tariff 379		0.000	1.09	1.91	1.91	0.000	979.60	0.05	0.05
752	1700053043285	892	1700053043294	Tariff 380		0.000	26.62	0.98	0.98	0.000	2129.12	0.05	0.05
573	1700053043300	993	1700053043319	Tariff 381		0.000	12.11	0.98	0.98	0.000	968.58	0.05	0.05
770	1700053062419			Tariff 382	3	0.000	16348.99	3.75	3.75	0.000	0.00	0.00	0.00
592	1700053164022			Tariff 384	2	0.000	16829.30	1.65	1.65	0.000	0.00	0.00	0.00
700	1700053104965	858	1700053104974	Tariff 387		0.000	89.15	5.53	5.53	0.000	891.53	0.05	0.05
593	1700053187039	532	1700053187048	Tariff 389	1	0.000	1102.73	1.25	1.25	0.000	59489.97	0.05	0.05
586	1700053289868	536	1700053289877	Tariff 390		0.000	3.01	3.52	3.52	0.000	1365.33	0.05	0.05
568	1700053141762, 1700053152392	538	1700053141771, 1700053152408	Tariff 392	3	0.000	18073.68	1.11	1.11	0.000	4819.65	0.05	0.05
579	1700053339473	8764	8764	Tariff 393		0.000	104.49	1.00	1.00	0.000	15900.41	0.05	0.05
Y16	1700060114727	Z16	1700060114736	Tariff 401		0.000	1223.50	1.12	1.12	0.000	1287.87	0.05	0.05

Import LLFC / DUoS Tariff ID	Import MPANs/MSIDs	Export LLFC / DUoS Tariff ID	Export MPANs/MSIDs	Name	Residual Charging Band	Import Super Red unit charge (p/kWh)	Import fixed charge (p/day)	Import capacity charge (p/kVA/day)	Import exceeded capacity charge (p/kVA/day)	Export Super Red unit charge (p/kWh)	Export fixed charge (p/day)	Export capacity charge (p/kVA/day)	Export exceeded capacity charge (p/kVA/day)
Y14		Z14		Tariff 405		0.000	435.20	0.79	0.79	0.000	435.20	0.05	0.05
584	1700053240055	534	1700053240064	Tariff 416	1	0.000	120.45	1.57	1.57	0.000	1510.60	0.05	0.05
8770	8770	8771	8771	Tariff 424		0.000	1127.77	0.91	0.91	0.000	1127.77	0.05	0.05
587	1700053287930	537	1700053282134	Tariff 426		0.000	24.44	2.98	2.98	0.000	4887.42	0.05	0.05
0052	0052	0053	0053	Tariff 432		0.000	226.90	0.79	0.79	0.000	45379.97	0.05	0.05
8768	8768	8769	8769	Tariff 433		0.000	1120.71	0.79	0.79	0.000	1120.71	0.05	0.05
Y02	1700060087278	Z02	1700060087287	Tariff 434		0.000	29.24	1.04	1.04	0.000	1922.84	0.05	0.05
582	1700053343424	869	1700053343433	Tariff 436		0.000	10.91	5.57	5.57	0.000	1025.40	0.05	0.05
Y06	1700060029675	Z06	1700060029684	Tariff 439	1	0.000	154.84	1.14	1.14	0.000	825.84	0.05	0.05
8760	8760	8760	8760	Tariff 440		0.000	249.81	1.87	1.87	0.000	35687.05	0.05	0.05
599	1700053298890	540	1700053298905	Tariff 443		0.000	32.04	1.06	1.06	0.000	5126.24	0.05	0.05
588	1700053280182	539	1700053280191	Tariff 444		0.000	244.73	0.97	0.97	0.000	735.96	0.05	0.05
574	1700060031850	955	1700060031860	Tariff 445		0.000	2261.88	0.68	0.68	0.000	2380.91	0.05	0.05

Import LLFC / DUoS Tariff ID	Import MPANs/MSIDs	Export LLFC / DUoS Tariff ID	Export MPANs/MSIDs	Name	Residual Charging Band	Import Super Red unit charge (p/kWh)	Import fixed charge (p/day)	Import capacity charge (p/kVA/day)	Import exceeded capacity charge (p/kVA/day)	Export Super Red unit charge (p/kWh)	Export fixed charge (p/day)	Export capacity charge (p/kVA/day)	Export exceeded capacity charge (p/kVA/day)
575	1700060004305	889	1700060004314	Tariff 446		0.000	2330.91	1.03	1.03	0.000	2453.57	0.05	0.05
Y03		Z03		Tariff 447		0.000	1236.35	0.79	0.79	0.000	1301.41	0.05	0.05
606	1700060022740	877	1700060022759	Tariff 448		0.000	263.50	0.99	0.99	0.000	1396.55	0.05	0.05
Y04	1700060033272	Z04	1700060033281	Tariff 451		0.000	12.85	1.84	1.84	0.000	1352.47	0.05	0.05
Y05	1700060025990			Tariff 452		0.000	2320.13	3.15	3.15	0.000	0.00	0.00	0.00
690	1715033416906			Tariff 453	1	0.000	1325.76	5.29	5.29	0.000	0.00	0.00	0.00
Y08	1700060175320	Z08	1700060175330	Tariff 454		0.000	4109.24	0.79	0.79	0.000	4109.24	0.05	0.05
Y10	1700060144926	Z10	1700060144935	Tariff 456		0.000	3879.51	0.79	0.79	0.000	3879.51	0.05	0.05
Y11	1700060198903	Z11	1700060198912	Tariff 457		0.000	1438.39	1.17	1.17	0.000	1514.08	0.05	0.05
Y12	1700060138560	Z12	1700060138579	Tariff 458		0.000	3.88	1.66	1.66	0.000	1347.21	0.05	0.05
755	1700060058365	904	1700060058374	Tariff 459		0.000	2833.34	0.65	0.65	0.000	2833.34	0.05	0.05
709	1700060066603			Tariff 460	3	0.000	4098.89	2.40	2.40	0.000	0.00	0.00	0.00
Y17		Z17		Tariff 462		0.000	1656.20	0.79	0.79	0.000	1743.36	0.05	0.05

Import LLFC / DUoS Tariff ID	Import MPANs/MSIDs	Export LLFC / DUoS Tariff ID	Export MPANs/MSIDs	Name	Residual Charging Band	Import Super Red unit charge (p/kWh)	Import fixed charge (p/day)	Import capacity charge (p/kVA/day)	Import exceeded capacity charge (p/kVA/day)	Export Super Red unit charge (p/kWh)	Export fixed charge (p/day)	Export capacity charge (p/kVA/day)	Export exceeded capacity charge (p/kVA/day)
Y18		Z18		Tariff 463		0.000	930.18	0.79	0.79	0.000	979.13	0.05	0.05
Y19				Tariff 464	2	0.000	19036.47	0.85	0.85	0.000	0.00	0.00	0.00
Y20	1700060113360	Z20	1700060113370	Tariff 465		0.000	1026.56	1.50	1.50	0.000	1080.56	0.05	0.05
8782	8782	8783	8783	Tariff 466		0.000	1302.99	1.34	1.34	0.000	1371.57	0.05	0.05
8784	8784	8785	8785	Tariff 467		0.000	1227.51	1.28	1.28	0.000	1292.11	0.05	0.05
Y23		Z23		Tariff 469		0.000	312.38	0.82	0.82	0.000	8724.50	0.05	0.05
Y24		Z24		Tariff 470		0.000	1440.80	1.53	1.53	0.000	2502.43	0.05	0.05
Y25	1700060225210	Z25	1700060225229	Tariff 471		0.000	31.41	1.12	1.12	0.000	1389.32	0.05	0.05
Y26		Z26		Tariff 472		0.000	1488.56	1.17	1.17	0.000	1566.90	0.05	0.05
Y27	1700060211722	Z27	1700060211810	Tariff 473		0.000	65.10	1.12	1.12	0.000	6567.17	0.05	0.05
0048	0048	0049	0049	Tariff 474		0.000	503.27	1.12	1.12	0.000	766.63	0.05	0.05

Annex 3 - Schedule of Charges for use of the Distribution System by Preserved/Additional LLF Classes

Scottish Hydro Electric Power Distribution plc - Effective from 1 April 2026 - Final LV and HV tariffs

Supercustomer preserved charges / additional LLFCs / DUoS Tariff IDs									
	Closed LLFCs / DUoS Tariff IDs	PCs	Red/black unit charge p/kWh	Amber/yellow unit charge p/kWh	Green unit charge p/kWh	Fixed charge p/MPAN/day			
Domestic Aggregated (Related MPAN)	17, 20, 104, 124, 304, 324	2	11.447	3.993	0.857				
Non-Domestic Aggregated or CT No Residual	S00, S15, S20	0, 3, 4, 5-8	13.842	4.829	1.037	27.65			
Non-Domestic Aggregated or CT Band 1	S01, S16, S21	0, 3, 4, 5-8	13.842	4.829	1.037	25.24			
Non-Domestic Aggregated or CT Band 2	S02, S17, S22	0, 3, 4, 5-8	13.842	4.829	1.037	13.62			
Non-Domestic Aggregated or CT Band 3	S03, S18, S23	0, 3, 4, 5-8	13.763	4.749	0.957	0.00			
Non-Domestic Aggregated or CT Band 4	S04, S19, S24	0, 3, 4, 5-8	13.389	4.375	0.583	0.00			
Non-Domestic Aggregated (related MPAN)	155, 175, 355, 375	4	13.842	4.829	1.037				
Notes:	Unit time periods are as specified in Annex 1.								

Site Specific preserved charges / additional LLFCs / DUoS Tariff IDs									
	Closed LLFCs / DUoS Tariff IDs	PCs	Red/black unit charge p/kWh	Amber/yellow unit charge p/kWh	Green unit charge p/kWh	Fixed charge p/MPAN/day	Capacity charge p/kVA/day	Exceeded capacity charge p/kVA/day	Reactive power charge p/kVArh
		0							

Annex 4 - Charges applied to LDNOs with HV/LV end users

Scottish Hydro Electric Power Distribution plc - Effective from 1st April 2026 - Final LDNO Tariffs

Time Bands for LV and HV Designated Properties			
Time periods	**Red Time Band**	**Amber Time Band**	**Green Time Band**
Monday to Friday (Including Bank Holidays) All Year	16:00 - 19:00		
Monday to Friday (Including Bank Holidays) All Year		07:00 - 16:00 19:00 - 21:00	
Monday to Friday (Including Bank Holidays) All Year			00:00 - 07:00 21:00 - 24:00
Saturday and Sunday All Year		12:00 - 20:00	00:00 - 12:00 20:00 - 24:00
Notes	All the above times are in UK Clock time		

Time Bands for Unmetered Properties			
	Black Time Band	**Yellow Time Band**	**Green Time Band**
Monday to Friday (Including Bank Holidays) March to October Inclusive		07:00 - 21:00	
Monday to Friday (Including Bank Holidays) November to February Inclusive	16:00 - 19:00	07:00 - 16:00 19:00 - 21:00	
Monday to Friday (Including Bank Holidays) April to March Inclusive			00:00 - 07:00 21:00 - 24:00
Saturday and Sunday All Year		12:00 - 20:00	00:00 - 12:00 20:00 - 24:00
Notes	All the above times are in UK Clock time		

Tariff name	Unique billing identifier	PCs	Red/black unit charge p/kWh	Amber/yellow unit charge p/kWh	Green unit charge p/kWh	Fixed charge p/MPAN/day	Capacity charge p/kVA/day	Exceeded capacity charge p/kVA/day	Reactive power charge p/kVArh
LDNO LV: Domestic Aggregated or CT with Residual		**0, 1, 2**	**7.932**	**2.767**	**0.594**	**8.16**			
LDNO LV: Domestic Aggregated (related MPAN)		**2**	**7.932**	**2.767**	**0.594**				

Tariff name	Unique billing identifier	PCs	Red/black unit charge p/kWh	Amber/yellow unit charge p/kWh	Green unit charge p/kWh	Fixed charge p/MPAN/day	Capacity charge p/kVA/day	Exceeded capacity charge p/kVA/day	Reactive power charge p/kVArh
LDNO LV: Non-Domestic Aggregated or CT No Residual		0, 3, 4, 5-8	9.591	3.346	0.718	19.16			
LDNO LV: Non-Domestic Aggregated or CT Band 1		0, 3, 4, 5-8	9.591	3.346	0.718	17.49			
LDNO LV: Non-Domestic Aggregated or CT Band 2		0, 3, 4, 5-8	9.591	3.346	0.718	9.44			
LDNO LV: Non-Domestic Aggregated or CT Band 3		0, 3, 4, 5-8	9.536	3.291	0.663	0.00			
LDNO LV: Non-Domestic Aggregated or CT Band 4		0, 3, 4, 5-8	9.277	3.031	0.404	0.00			
LDNO LV: Non-Domestic Aggregated (related MPAN)		4	9.591	3.346	0.718				
LDNO LV: LV Site Specific No Residual		0	5.931	1.962	0.473	50.70	9.58	9.58	0.306
LDNO LV: LV Site Specific Band 1		0	5.698	1.729	0.240	0.00	9.58	9.58	0.306
LDNO LV: LV Site Specific Band 2		0	5.577	1.609	0.207	0.00	9.58	9.58	0.306
LDNO LV: LV Site Specific Band 3		0	5.507	1.539	0.207	0.00	9.58	9.58	0.306
LDNO LV: LV Site Specific Band 4		0	5.439	1.470	0.207	0.00	9.58	9.58	0.306
LDNO LV: Unmetered Supplies		0, 1 or 8	19.168	6.215	4.744				
LDNO LV: LV Generation Aggregated		0 or 8	-8.397	-2.929	-0.629	0.00			

Tariff name	Unique billing identifier	PCs	Red/black unit charge p/kWh	Amber/yellow unit charge p/kWh	Green unit charge p/kWh	Fixed charge p/MPAN/day	Capacity charge p/kVA/day	Exceeded capacity charge p/kVA/day	Reactive power charge p/kVArh
LDNO LV: LV Generation Site Specific		0	-8.397	-2.929	-0.629	0.00			0.502
LDNO HV: Domestic Aggregated or CT with Residual		0, 1, 2	5.145	1.795	0.385	5.29			
LDNO HV: Domestic Aggregated (Related MPAN)		2	5.145	1.795	0.385				
LDNO HV: Non-Domestic Aggregated or CT No Residual		0, 3, 4, 5-8	6.222	2.170	0.466	12.43			
LDNO HV: Non-Domestic Aggregated or CT Band 1		0, 3, 4, 5-8	6.222	2.170	0.466	11.34			
LDNO HV: Non-Domestic Aggregated or CT Band 2		0, 3, 4, 5-8	6.222	2.170	0.466	6.12			
LDNO HV: Non-Domestic Aggregated or CT Band 3		0, 3, 4, 5-8	6.186	2.135	0.430	0.00			
LDNO HV: Non-Domestic Aggregated or CT Band 4		0, 3, 4, 5-8	6.018	1.967	0.262	0.00			
LDNO HV: Non-Domestic Aggregated (related MPAN)		4	6.222	2.170	0.466				
LDNO HV: LV Site Specific No Residual		0	3.848	1.273	0.307	32.89	6.22	6.22	0.199
LDNO HV: LV Site Specific Band 1		0	3.696	1.122	0.155	0.00	6.22	6.22	0.199
LDNO HV: LV Site Specific Band 2		0	3.618	1.043	0.134	0.00	6.22	6.22	0.199
LDNO HV: LV Site Specific Band 3		0	3.573	0.998	0.134	0.00	6.22	6.22	0.199

Tariff name	Unique billing identifier	PCs	Red/black unit charge p/kWh	Amber/yellow unit charge p/kWh	Green unit charge p/kWh	Fixed charge p/MPAN/day	Capacity charge p/kVA/day	Exceeded capacity charge p/kVA/day	Reactive power charge p/kVArh
LDNO HV: LV Site Specific Band 4		0	3.528	0.954	0.134	0.00	6.22	6.22	0.199
LDNO HV: LV Sub Site Specific No Residual		0	2.516	0.639	0.253	122.16	11.83	11.83	0.116
LDNO HV: LV Sub Site Specific Band 1		0	2.294	0.417	0.031	73.97	11.83	11.83	0.116
LDNO HV: LV Sub Site Specific Band 2		0	2.179	0.303	0.000	73.97	11.83	11.83	0.116
LDNO HV: LV Sub Site Specific Band 3		0	2.113	0.236	0.000	73.97	11.83	11.83	0.116
LDNO HV: LV Sub Site Specific Band 4		0	2.048	0.171	0.000	73.97	11.83	11.83	0.116
LDNO HV: HV Site Specific No Residual		0	1.421	0.379	0.233	593.13	14.50	14.50	0.074
LDNO HV: HV Site Specific Band 1		0	1.421	0.379	0.233	80.52	14.50	14.50	0.074
LDNO HV: HV Site Specific Band 2		0	1.056	0.013	0.000	0.00	14.50	14.50	0.074
LDNO HV: HV Site Specific Band 3		0	0.474	0.000	0.000	0.00	14.50	14.50	0.074
LDNO HV: HV Site Specific Band 4		0	0.000	0.000	0.000	0.00	14.50	14.50	0.074
LDNO HV: Unmetered Supplies		0, 1 or 8	12.434	4.032	3.077				
LDNO HV: LV Generation Aggregated		0 or 8	-8.397	-2.929	-0.629	0.00			

Tariff name	Unique billing identifier	PCs	Red/black unit charge p/kWh	Amber/yellow unit charge p/kWh	Green unit charge p/kWh	Fixed charge p/MPAN/day	Capacity charge p/kVA/day	Exceeded capacity charge p/kVA/day	Reactive power charge p/kVArh
LDNO HV: LV Sub Generation Aggregated		0 or 8	-7.268	-2.471	-0.562	0.00			
LDNO HV: LV Generation Site Specific		0	-8.397	-2.929	-0.629	0.00			0.502
LDNO HV: LV Sub Generation Site Specific		0	-7.268	-2.471	-0.562	0.00			0.384
LDNO HV: HV Generation Site Specific		0	-3.372	-0.857	-0.339	0.00			0.329

Tariff name	Unique billing identifier	PCs	Red/black unit charge p/kWh	Amber/yellow unit charge p/kWh	Green unit charge p/kWh	Fixed charge p/MPAN/day	Capacity charge p/kVA/day	Exceeded capacity charge p/kVA/day	Reactive power charge p/kVArh
LDNO HVplus: Domestic Aggregated or CT with Residual		0, 1, 2	3.450	1.203	0.258	3.55			
LDNO HVplus: Domestic Aggregated (related MPAN)		2	3.450	1.203	0.258				
LDNO HVplus: Non-Domestic Aggregated or CT No Residual		0, 3, 4, 5-8	4.172	1.455	0.312	8.33			
LDNO HVplus: Non-Domestic Aggregated or CT Band 1		0, 3, 4, 5-8	4.172	1.455	0.312	7.61			
LDNO HVplus: Non-Domestic Aggregated or CT Band 2		0, 3, 4, 5-8	4.172	1.455	0.312	4.11			
LDNO HVplus: Non-Domestic Aggregated or CT Band 3		0, 3, 4, 5-8	4.148	1.431	0.288	0.00			
LDNO HVplus: Non-Domestic Aggregated or CT Band 4		0, 3, 4, 5-8	4.035	1.319	0.176	0.00			

Tariff name	Unique billing identifier	PCs	Red/black unit charge p/kWh	Amber/yellow unit charge p/kWh	Green unit charge p/kWh	Fixed charge p/MPAN/day	Capacity charge p/kVA/day	Exceeded capacity charge p/kVA/day	Reactive power charge p/kVArh
LDNO HVplus: Non-Domestic Aggregated (related MPAN)		4	4.172	1.455	0.312				
LDNO HVplus: LV Site Specific No Residual		0	2.580	0.854	0.206	22.05	4.17	4.17	0.133
LDNO HVplus: LV Site Specific Band 1		0	2.478	0.752	0.104	0.00	4.17	4.17	0.133
LDNO HVplus: LV Site Specific Band 2		0	2.426	0.700	0.090	0.00	4.17	4.17	0.133
LDNO HVplus: LV Site Specific Band 3		0	2.396	0.669	0.090	0.00	4.17	4.17	0.133
LDNO HVplus: LV Site Specific Band 4		0	2.366	0.640	0.090	0.00	4.17	4.17	0.133
LDNO HVplus: LV Sub Site Specific No Residual		0	1.622	0.412	0.163	78.78	7.63	7.63	0.075
LDNO HVplus: LV Sub Site Specific Band 1		0	1.479	0.269	0.020	47.70	7.63	7.63	0.075
LDNO HVplus: LV Sub Site Specific Band 2		0	1.405	0.195	0.000	47.70	7.63	7.63	0.075
LDNO HVplus: LV Sub Site Specific Band 3		0	1.362	0.152	0.000	47.70	7.63	7.63	0.075
LDNO HVplus: LV Sub Site Specific Band 4		0	1.321	0.110	0.000	47.70	7.63	7.63	0.075
LDNO HVplus: HV Site Specific No Residual		0	0.907	0.242	0.149	378.34	9.25	9.25	0.047
LDNO HVplus: HV Site Specific Band 1		0	0.907	0.242	0.149	51.36	9.25	9.25	0.047
LDNO HVplus: HV Site Specific Band 2		0	0.673	0.008	0.000	0.00	9.25	9.25	0.047

Tariff name	Unique billing identifier	PCs	Red/black unit charge p/kWh	Amber/yellow unit charge p/kWh	Green unit charge p/kWh	Fixed charge p/MPAN/day	Capacity charge p/kVA/day	Exceeded capacity charge p/kVA/day	Reactive power charge p/kVArh
LDNO HVplus: HV Site Specific Band 3		0	0.303	0.000	0.000	0.00	9.25	9.25	0.047
LDNO HVplus: HV Site Specific Band 4		0	0.000	0.000	0.000	0.00	9.25	9.25	0.047
LDNO HVplus: Unmetered Supplies		0, 1 or 8	8.338	2.704	2.063				
LDNO HVplus: LV Generation Aggregated		0 or 8	-3.566	-1.244	-0.267	0.00			
LDNO HVplus: LV Sub Generation Aggregated		0 or 8	-3.345	-1.138	-0.259	0.00			
LDNO HVplus: LV Generation Site Specific		0	-3.566	-1.244	-0.267	0.00			0.213
LDNO HVplus: LV Sub Generation Site Specific		0	-3.345	-1.138	-0.259	0.00			0.177
LDNO HVplus: HV Generation Site Specific		0	-3.372	-0.857	-0.339	1073.07			0.329
LDNO EHV: Domestic Aggregated or CT with Residual		0, 1, 2	2.137	0.746	0.160	2.20			
LDNO EHV: Domestic Aggregated (related MPAN)		2	2.137	0.746	0.160				
LDNO EHV: Non-Domestic Aggregated or CT No Residual		0, 3, 4, 5-8	2.585	0.902	0.194	5.16			
LDNO EHV: Non-Domestic Aggregated or CT Band 1		0, 3, 4, 5-8	2.585	0.902	0.194	4.71			
LDNO EHV: Non-Domestic Aggregated or CT Band 2		0, 3, 4, 5-8	2.585	0.902	0.194	2.54			
LDNO EHV: Non-Domestic Aggregated or CT Band 3		0, 3, 4, 5-8	2.570	0.887	0.179	0.00			

Tariff name	Unique billing identifier	PCs	Red/black unit charge p/kWh	Amber/yellow unit charge p/kWh	Green unit charge p/kWh	Fixed charge p/MPAN/day	Capacity charge p/kVA/day	Exceeded capacity charge p/kVA/day	Reactive power charge p/kVArh
LDNO EHV: Non-Domestic Aggregated or CT Band 4		0, 3, 4, 5-8	2.500	0.817	0.109	0.00			
LDNO EHV: Non-Domestic Aggregated (related MPAN)		4	2.585	0.902	0.194				
LDNO EHV: LV Site Specific No Residual		0	1.598	0.529	0.127	13.66	2.58	2.58	0.082
LDNO EHV: LV Site Specific Band 1		0	1.536	0.466	0.065	0.00	2.58	2.58	0.082
LDNO EHV: LV Site Specific Band 2		0	1.503	0.433	0.056	0.00	2.58	2.58	0.082
LDNO EHV: LV Site Specific Band 3		0	1.484	0.415	0.056	0.00	2.58	2.58	0.082
LDNO EHV: LV Site Specific Band 4		0	1.466	0.396	0.056	0.00	2.58	2.58	0.082
LDNO EHV: LV Sub Site Specific No Residual		0	1.005	0.255	0.101	48.81	4.73	4.73	0.046
LDNO EHV: LV Sub Site Specific Band 1		0	0.916	0.167	0.012	29.55	4.73	4.73	0.046
LDNO EHV: LV Sub Site Specific Band 2		0	0.871	0.121	0.000	29.55	4.73	4.73	0.046
LDNO EHV: LV Sub Site Specific Band 3		0	0.844	0.094	0.000	29.55	4.73	4.73	0.046
LDNO EHV: LV Sub Site Specific Band 4		0	0.818	0.068	0.000	29.55	4.73	4.73	0.046
LDNO EHV: HV Site Specific No Residual		0	0.562	0.150	0.092	234.40	5.73	5.73	0.029
LDNO EHV: HV Site Specific Band 1		0	0.562	0.150	0.092	31.82	5.73	5.73	0.029

Tariff name	Unique billing identifier	PCs	Red/black unit charge p/kWh	Amber/yellow unit charge p/kWh	Green unit charge p/kWh	Fixed charge p/MPAN/day	Capacity charge p/kVA/day	Exceeded capacity charge p/kVA/day	Reactive power charge p/kVArh
LDNO EHV: HV Site Specific Band 2		0	0.417	0.005	0.000	0.00	5.73	5.73	0.029
LDNO EHV: HV Site Specific Band 3		0	0.187	0.000	0.000	0.00	5.73	5.73	0.029
LDNO EHV: HV Site Specific Band 4		0	0.000	0.000	0.000	0.00	5.73	5.73	0.029
LDNO EHV: Unmetered Supplies		0, 1 or 8	5.166	1.675	1.278				
LDNO EHV: LV Generation Aggregated		0 or 8	-2.210	-0.771	-0.165	0.00			
LDNO EHV: LV Sub Generation Aggregated		0 or 8	-2.073	-0.705	-0.160	0.00			
LDNO EHV: LV Generation Site Specific		0	-2.210	-0.771	-0.165	0.00			0.132
LDNO EHV: LV Sub Generation Site Specific		0	-2.073	-0.705	-0.160	0.00			0.110
LDNO EHV: HV Generation Site Specific		0	-2.089	-0.531	-0.210	664.82			0.204
LDNO 132kV/EHV: Domestic Aggregated or CT with Residual		0, 1, 2	0.810	0.283	0.061	0.83			
LDNO 132kV/EHV: Domestic Aggregated (related MPAN)		2	0.810	0.283	0.061				
LDNO 132kV/EHV: Non-Domestic Aggregated or CT No Residual		0, 3, 4, 5-8	0.980	0.342	0.073	1.96			
LDNO 132kV/EHV: Non-Domestic Aggregated or CT Band 1		0, 3, 4, 5-8	0.980	0.342	0.073	1.79			
LDNO 132kV/EHV: Non-Domestic Aggregated or CT Band 2		0, 3, 4, 5-8	0.980	0.342	0.073	0.96			

Tariff name	Unique billing identifier	PCs	Red/black unit charge p/kWh	Amber/yellow unit charge p/kWh	Green unit charge p/kWh	Fixed charge p/MPAN/day	Capacity charge p/kVA/day	Exceeded capacity charge p/kVA/day	Reactive power charge p/kVArh
LDNO 132kV/EHV: Non-Domestic Aggregated or CT Band 3		0, 3, 4, 5-8	0.974	0.336	0.068	0.00			
LDNO 132kV/EHV: Non-Domestic Aggregated or CT Band 4		0, 3, 4, 5-8	0.948	0.310	0.041	0.00			
LDNO 132kV/EHV: Non-Domestic Aggregated (related MPAN)		4	0.980	0.342	0.073				
LDNO 132kV/EHV: LV Site Specific No Residual		0	0.606	0.200	0.048	5.18	0.98	0.98	0.031
LDNO 132kV/EHV: LV Site Specific Band 1		0	0.582	0.177	0.024	0.00	0.98	0.98	0.031
LDNO 132kV/EHV: LV Site Specific Band 2		0	0.570	0.164	0.021	0.00	0.98	0.98	0.031
LDNO 132kV/EHV: LV Site Specific Band 3		0	0.563	0.157	0.021	0.00	0.98	0.98	0.031
LDNO 132kV/EHV: LV Site Specific Band 4		0	0.556	0.150	0.021	0.00	0.98	0.98	0.031
LDNO 132kV/EHV: LV Sub Site Specific No Residual		0	0.381	0.097	0.038	18.50	1.79	1.79	0.018
LDNO 132kV/EHV: LV Sub Site Specific Band 1		0	0.347	0.063	0.005	11.20	1.79	1.79	0.018
LDNO 132kV/EHV: LV Sub Site Specific Band 2		0	0.330	0.046	0.000	11.20	1.79	1.79	0.018
LDNO 132kV/EHV: LV Sub Site Specific Band 3		0	0.320	0.036	0.000	11.20	1.79	1.79	0.018
LDNO 132kV/EHV: LV Sub Site Specific Band 4		0	0.310	0.026	0.000	11.20	1.79	1.79	0.018
LDNO 132kV/EHV: HV Site Specific No Residual		0	0.213	0.057	0.035	88.85	2.17	2.17	0.011

Tariff name	Unique billing identifier	PCs	Red/black unit charge p/kWh	Amber/yellow unit charge p/kWh	Green unit charge p/kWh	Fixed charge p/MPAN/day	Capacity charge p/kVA/day	Exceeded capacity charge p/kVA/day	Reactive power charge p/kVArh
LDNO 132kV/EHV: HV Site Specific Band 1		0	0.213	0.057	0.035	12.06	2.17	2.17	0.011
LDNO 132kV/EHV: HV Site Specific Band 2		0	0.158	0.002	0.000	0.00	2.17	2.17	0.011
LDNO 132kV/EHV: HV Site Specific Band 3		0	0.071	0.000	0.000	0.00	2.17	2.17	0.011
LDNO 132kV/EHV: HV Site Specific Band 4		0	0.000	0.000	0.000	0.00	2.17	2.17	0.011
LDNO 132kV/EHV: Unmetered Supplies		0, 1 or 8	1.958	0.635	0.485				
LDNO 132kV/EHV: LV Generation Aggregated		0 or 8	-0.838	-0.292	-0.063	0.00			
LDNO 132kV/EHV: LV Sub Generation Aggregated		0 or 8	-0.786	-0.267	-0.061	0.00			
LDNO 132kV/EHV: LV Generation Site Specific		0	-0.838	-0.292	-0.063	0.00			0.050
LDNO 132kV/EHV: LV Sub Generation Site Specific		0	-0.786	-0.267	-0.061	0.00			0.042
LDNO 132kV/EHV: HV Generation Site Specific		0	-0.792	-0.201	-0.080	252.01			0.077
LDNO 132kV: Domestic Aggregated or CT with Residual		0, 1, 2	0.687	0.240	0.051	0.71			
LDNO 132kV: Domestic Aggregated (related MPAN)		2	0.687	0.240	0.051				
LDNO 132kV: Non-Domestic Aggregated or CT No Residual		0, 3, 4, 5-8	0.830	0.290	0.062	1.66			
LDNO 132kV: Non-Domestic Aggregated or CT Band 1		0, 3, 4, 5-8	0.830	0.290	0.062	1.51			

Tariff name	Unique billing identifier	PCs	Red/black unit charge p/kWh	Amber/yellow unit charge p/kWh	Green unit charge p/kWh	Fixed charge p/MPAN/day	Capacity charge p/kVA/day	Exceeded capacity charge p/kVA/day	Reactive power charge p/kVArh
LDNO 132kV: Non-Domestic Aggregated or CT Band 2		0, 3, 4, 5-8	0.830	0.290	0.062	0.82			
LDNO 132kV: Non-Domestic Aggregated or CT Band 3		0, 3, 4, 5-8	0.826	0.285	0.057	0.00			
LDNO 132kV: Non-Domestic Aggregated or CT Band 4		0, 3, 4, 5-8	0.803	0.262	0.035	0.00			
LDNO 132kV: Non-Domestic Aggregated (related MPAN)		4	0.830	0.290	0.062				
LDNO 132kV: LV Site Specific No Residual		0	0.513	0.170	0.041	4.39	0.83	0.83	0.026
LDNO 132kV: LV Site Specific Band 1		0	0.493	0.150	0.021	0.00	0.83	0.83	0.026
LDNO 132kV: LV Site Specific Band 2		0	0.483	0.139	0.018	0.00	0.83	0.83	0.026
LDNO 132kV: LV Site Specific Band 3		0	0.477	0.133	0.018	0.00	0.83	0.83	0.026
LDNO 132kV: LV Site Specific Band 4		0	0.471	0.127	0.018	0.00	0.83	0.83	0.026
LDNO 132kV: LV Sub Site Specific No Residual		0	0.323	0.082	0.032	15.68	1.52	1.52	0.015
LDNO 132kV: LV Sub Site Specific Band 1		0	0.294	0.054	0.004	9.49	1.52	1.52	0.015
LDNO 132kV: LV Sub Site Specific Band 2		0	0.280	0.039	0.000	9.49	1.52	1.52	0.015
LDNO 132kV: LV Sub Site Specific Band 3		0	0.271	0.030	0.000	9.49	1.52	1.52	0.015
LDNO 132kV: LV Sub Site Specific Band 4		0	0.263	0.022	0.000	9.49	1.52	1.52	0.015

Tariff name	Unique billing identifier	PCs	Red/black unit charge p/kWh	Amber/yellow unit charge p/kWh	Green unit charge p/kWh	Fixed charge p/MPAN/day	Capacity charge p/kVA/day	Exceeded capacity charge p/kVA/day	Reactive power charge p/kVArh
LDNO 132kV: HV Site Specific No Residual		0	0.180	0.048	0.030	75.30	1.84	1.84	0.009
LDNO 132kV: HV Site Specific Band 1		0	0.180	0.048	0.030	10.22	1.84	1.84	0.009
LDNO 132kV: HV Site Specific Band 2		0	0.134	0.002	0.000	0.00	1.84	1.84	0.009
LDNO 132kV: HV Site Specific Band 3		0	0.060	0.000	0.000	0.00	1.84	1.84	0.009
LDNO 132kV: HV Site Specific Band 4		0	0.000	0.000	0.000	0.00	1.84	1.84	0.009
LDNO 132kV: Unmetered Supplies		0, 1 or 8	1.659	0.538	0.411				
LDNO 132kV: LV Generation Aggregated		0 or 8	-0.710	-0.248	-0.053	0.00			
LDNO 132kV: LV Sub Generation Aggregated		0 or 8	-0.666	-0.226	-0.051	0.00			
LDNO 132kV: LV Generation Site Specific		0	-0.710	-0.248	-0.053	0.00			0.042
LDNO 132kV: LV Sub Generation Site Specific		0	-0.666	-0.226	-0.051	0.00			0.035
LDNO 132kV: HV Generation Site Specific		0	-0.671	-0.170	-0.067	213.57			0.065
LDNO 0000: Domestic Aggregated or CT with Residual		0, 1, 2	0.687	0.240	0.051	0.71			
LDNO 0000: Domestic Aggregated (related MPAN)		2	0.687	0.240	0.051				
LDNO 0000: Non-Domestic Aggregated or CT No Residual		0, 3, 4, 5-8	0.830	0.290	0.062	1.66			

Tariff name	Unique billing identifier	PCs	Red/black unit charge p/kWh	Amber/yellow unit charge p/kWh	Green unit charge p/kWh	Fixed charge p/MPAN/day	Capacity charge p/kVA/day	Exceeded capacity charge p/kVA/day	Reactive power charge p/kVArh
LDNO 0000: Non-Domestic Aggregated or CT Band 1		0, 3, 4, 5-8	0.830	0.290	0.062	1.51			
LDNO 0000: Non-Domestic Aggregated or CT Band 2		0, 3, 4, 5-8	0.830	0.290	0.062	0.82			
LDNO 0000: Non-Domestic Aggregated or CT Band 3		0, 3, 4, 5-8	0.826	0.285	0.057	0.00			
LDNO 0000: Non-Domestic Aggregated or CT Band 4		0, 3, 4, 5-8	0.803	0.262	0.035	0.00			
LDNO 0000: Non-Domestic Aggregated (related MPAN)		4	0.830	0.290	0.062				
LDNO 0000: LV Site Specific No Residual		0	0.513	0.170	0.041	4.39	0.83	0.83	0.026
LDNO 0000: LV Site Specific Band 1		0	0.493	0.150	0.021	0.00	0.83	0.83	0.026
LDNO 0000: LV Site Specific Band 2		0	0.483	0.139	0.018	0.00	0.83	0.83	0.026
LDNO 0000: LV Site Specific Band 3		0	0.477	0.133	0.018	0.00	0.83	0.83	0.026
LDNO 0000: LV Site Specific Band 4		0	0.471	0.127	0.018	0.00	0.83	0.83	0.026
LDNO 0000: LV Sub Site Specific No Residual		0	0.323	0.082	0.032	15.68	1.52	1.52	0.015
LDNO 0000: LV Sub Site Specific Band 1		0	0.294	0.054	0.004	9.49	1.52	1.52	0.015
LDNO 0000: LV Sub Site Specific Band 2		0	0.280	0.039	0.000	9.49	1.52	1.52	0.015
LDNO 0000: LV Sub Site Specific Band 3		0	0.271	0.030	0.000	9.49	1.52	1.52	0.015

Tariff name	Unique billing identifier	PCs	Red/black unit charge p/kWh	Amber/yellow unit charge p/kWh	Green unit charge p/kWh	Fixed charge p/MPAN/day	Capacity charge p/kVA/day	Exceeded capacity charge p/kVA/day	Reactive power charge p/kVArh
LDNO 0000: LV Sub Site Specific Band 4		0	0.263	0.022	0.000	9.49	1.52	1.52	0.015
LDNO 0000: HV Site Specific No Residual		0	0.180	0.048	0.030	75.30	1.84	1.84	0.009
LDNO 0000: HV Site Specific Band 1		0	0.180	0.048	0.030	10.22	1.84	1.84	0.009
LDNO 0000: HV Site Specific Band 2		0	0.134	0.002	0.000	0.00	1.84	1.84	0.009
LDNO 0000: HV Site Specific Band 3		0	0.060	0.000	0.000	0.00	1.84	1.84	0.009
LDNO 0000: HV Site Specific Band 4		0	0.000	0.000	0.000	0.00	1.84	1.84	0.009
LDNO 0000: Unmetered Supplies		0, 1 or 8	1.659	0.538	0.411				
LDNO 0000: LV Generation Aggregated		0 or 8	-0.710	-0.248	-0.053	0.00			
LDNO 0000: LV Sub Generation Aggregated		0 or 8	-0.666	-0.226	-0.051	0.00			
LDNO 0000: LV Generation Site Specific		0	-0.710	-0.248	-0.053	0.00			0.042
LDNO 0000: LV Sub Generation Site Specific		0	-0.666	-0.226	-0.051	0.00			0.035
LDNO 0000: HV Generation Site Specific		0	-0.671	-0.170	-0.067	213.57			0.065

Annex 5 – Schedule of Line Loss Factors

LLF time periods:

Scottish Hydro Electric Power Distribution plc - LLFs Effective from 1st April 2026				
Time periods	**Period 1**	**Period 2**	**Period 3**	**Period 4**
	Winter Weekday Peak	**Winter Weekday**	**Other**	**Night**
Monday to Friday Nov to Feb	16:00 - 19:00	07:30 - 16:00 19:00 - 20:00	20:00 - 00:30	00:30 - 07:30
Saturday and Sunday All Year and Monday to Friday Mar to Oct			07:30 - 00:30	00:30 - 07:30
Notes	All the above times are in UK Clock time			

Generic demand and generation LLFs					
Metered voltage, respective periods and associated LLFCs / DUoS Tariff IDs					
Metered voltage	**Period 1**	**Period 2**	**Period 3**	**Period 4**	**Associated LLFC / DUoS Tariff ID**
Low Voltage Network	1.078	1.079	1.085	1.091	15-20, 22, 24-28, 30, 31, 33-38, 100-102, 104-106, 110, 111, 120-122, 124-128, 152, 155, 172, 175, 300-302, 304, 305, 320-322, 324-325, 352, 355, 372, 375, 506, 800-805, P00-P84, R35-R99, S00-S04, S10-S14 / 1, 2, 9, 10, 909, 951
Low Voltage Substation	1.030	1.031	1.046	1.052	32, P85-P89, S05-S09 / 3, 4, 11, 12, 952
High Voltage Network	1.007	1.007	1.010	1.015	604, P90-P94, S15-S24 / 5, 6, 13, 14, 910
High Voltage Substation	1.003	1.003	1.008	1.013	560, 562-569, 589, 595-598 / 520, 522-530, 538, 541-554
33kV Generic	0.991	0.991	0.991	0.996	799 / 960
132/33kV Generic					
132kV Generic					

EHV site specific LLFs					
Demand					
Tariff	Period 1	Period 2	Period 3	Period 4	Associated LLFC / DUoS Tariff ID
Tariff 1	1.003	1.003	1.008	1.013	595
Tariff 2	1.003	1.003	1.008	1.013	596
Tariff 3	1.003	1.003	1.008	1.013	597
Tariff 4	1.003	1.003	1.008	1.013	598
Tariff 5	1.003	1.003	1.008	1.013	560
Tariff 6	1.003	1.003	1.008	1.013	560
Tariff 8	1.003	1.003	1.008	1.013	562
Tariff 9	1.003	1.003	1.008	1.013	562
Tariff 10	1.003	1.003	1.008	1.013	562
Tariff 11	1.003	1.003	1.008	1.013	563
Tariff 12	1.003	1.003	1.008	1.013	564
Tariff 14	1.003	1.003	1.008	1.013	566
Tariff 15	1.003	1.003	1.008	1.013	567
Tariff 16	1.003	1.003	1.008	1.013	569
Tariff 17	1.001	1.001	1.004	1.001	713
Tariff 18	1.000	1.000	1.000	1.000	714
Tariff 20	1.000	1.000	1.000	1.000	8707
Tariff 21	0.998	0.999	0.998	0.998	717
Tariff 22	1.003	1.007	1.003	1.006	718
Tariff 23	1.001	1.001	1.002	1.002	637
Tariff 24	0.990	0.990	0.990	0.990	8328
Tariff 25	1.014	1.016	1.014	1.014	722
Tariff 26	0.984	0.984	0.982	0.982	8696
Tariff 27	1.038	1.036	1.036	1.032	723
Tariff 28	1.029	1.031	1.033	1.028	724
Tariff 29	0.999	0.998	0.998	0.998	725
Tariff 30	0.994	0.994	0.994	0.994	726
Tariff 31	0.992	0.992	0.992	0.992	8699
Tariff 32	0.992	0.992	0.992	0.992	8699
Tariff 33	1.012	1.013	1.012	1.012	727
Tariff 35	1.004	1.004	1.004	1.004	730
Tariff 36	1.004	1.004	1.004	1.004	731
Tariff 37	1.003	1.003	1.003	1.002	732
Tariff 38	1.000	1.000	1.000	1.000	787
Tariff 39	#N/A	#N/A	#N/A	#N/A	8688
Tariff 40	1.000	1.000	1.000	1.001	735

EHV site specific LLFs					
Demand					
Tariff	Period 1	Period 2	Period 3	Period 4	Associated LLFC / DUoS Tariff ID
Tariff 41	1.000	1.000	1.000	1.001	736
Tariff 42	1.000	1.012	1.037	1.025	737
Tariff 43	1.000	1.000	0.991	0.997	738
Tariff 44	1.000	1.000	0.991	0.997	739
Tariff 45	1.004	1.005	1.005	1.004	740
Tariff 46	1.020	1.021	1.028	1.012	741
Tariff 47	0.998	1.003	1.003	1.002	742
Tariff 48	1.000	1.000	1.000	1.000	743
Tariff 49	1.013	1.013	1.014	1.013	744
Tariff 50	1.027	1.028	1.028	1.024	745
Tariff 51	1.031	1.035	1.035	1.030	746
Tariff 52	0.981	0.982	0.979	0.978	748
Tariff 53	1.072	1.071	1.071	1.072	749
Tariff 54	0.998	0.998	0.998	0.998	753
Tariff 55	1.029	1.027	1.027	1.022	754
Tariff 57	0.948	0.946	1.030	1.012	756
Tariff 58	1.003	1.003	1.003	1.003	758
Tariff 59	1.003	1.003	1.008	1.013	589
Tariff 60	1.169	1.177	1.160	1.154	761
Tariff 61	0.944	0.943	0.945	0.940	8694
Tariff 62	0.944	0.943	0.945	0.940	8694
Tariff 63	1.000	1.000	1.000	1.000	762
Tariff 64	0.969	0.982	1.000	0.992	763
Tariff 65	1.084	1.068	1.045	1.045	767
Tariff 67	1.003	1.003	1.003	1.003	769
Tariff 68	#N/A	#N/A	#N/A	#N/A	8687
Tariff 69	1.003	1.003	1.003	1.003	772
Tariff 70	1.000	1.000	1.000	1.000	773
Tariff 71	1.000	1.000	1.000	1.000	774
Tariff 72	1.000	1.000	1.022	1.000	633
Tariff 73	0.999	0.999	0.999	0.999	775
Tariff 74	0.910	0.909	0.911	0.909	777
Tariff 75	1.000	1.000	1.004	1.002	779
Tariff 79	0.995	0.996	0.996	0.995	783
Tariff 80	0.995	0.996	0.996	0.995	784
Tariff 82	1.014	1.007	1.107	1.039	786

EHV site specific LLFs					
Demand					
Tariff	Period 1	Period 2	Period 3	Period 4	Associated LLFC / DUoS Tariff ID
Tariff 83	#N/A	#N/A	#N/A	#N/A	8689
Tariff 84	#N/A	#N/A	#N/A	#N/A	8689
Tariff 85	1.011	1.009	1.009	1.007	789
Tariff 86	1.000	1.000	1.000	1.000	791
Tariff 87	0.977	0.978	0.977	0.977	8740
Tariff 88	1.014	1.015	1.015	1.012	607
Tariff 89	0.999	0.999	0.999	1.000	608
Tariff 90	1.094	1.101	1.101	1.096	729
Tariff 91	1.160	1.159	1.167	1.152	609
Tariff 93	1.012	1.012	1.013	1.013	610
Tariff 94	1.010	1.011	1.012	1.009	611
Tariff 95	1.017	1.019	1.020	1.016	612
Tariff 96	1.034	1.038	1.040	1.034	613
Tariff 97	1.019	1.014	1.018	1.012	614
Tariff 98	1.020	1.017	1.017	1.015	615
Tariff 100	1.019	1.020	1.020	1.019	704
Tariff 101	1.010	1.011	1.010	1.009	705
Tariff 102	1.011	1.011	1.011	1.009	706
Tariff 103	1.010	1.012	1.012	1.012	707
Tariff 104	1.000	1.000	1.000	1.000	708
Tariff 106	1.004	1.007	1.006	1.003	710
Tariff 108	1.016	1.019	1.019	1.021	685
Tariff 109	1.000	1.000	1.000	1.000	686
Tariff 110	1.005	1.005	1.003	1.004	687
Tariff 111	1.016	1.016	1.014	1.013	688
Tariff 112	1.000	1.000	1.000	1.000	638
Tariff 122	1.000	1.000	1.000	1.000	689
Tariff 123	1.000	1.000	1.000	1.000	689
Tariff 124	1.000	1.000	1.000	1.000	689
Tariff 125	1.000	1.000	1.000	1.000	689
Tariff 126	1.000	1.000	1.000	1.000	690
Tariff 127	1.000	1.000	1.000	1.000	690
Tariff 128	1.016	1.021	1.018	1.018	616
Tariff 129	1.042	1.033	1.067	1.040	617
Tariff 130	1.092	1.091	1.120	1.089	618
Tariff 131	1.007	1.009	1.018	1.003	619

EHV site specific LLFs					
Demand					
Tariff	Period 1	Period 2	Period 3	Period 4	Associated LLFC / DUoS Tariff ID
Tariff 132	0.975	0.975	0.975	0.975	620
Tariff 133	1.051	1.055	1.049	1.047	621
Tariff 134	1.000	1.000	1.000	1.000	622
Tariff 135	1.201	1.228	1.191	1.182	623
Tariff 136	1.005	1.006	1.006	1.005	625
Tariff 137	1.003	1.002	1.003	1.002	626
Tariff 138	1.000	1.000	1.000	1.000	766
Tariff 140	1.000	1.000	1.000	1.000	793
Tariff 141	0.998	0.998	0.998	0.998	630
Tariff 143	0.992	0.992	0.992	0.992	634
Tariff 144	1.011	1.012	1.012	1.010	635
Tariff 146	0.988	0.988	0.995	0.994	790
Tariff 147	0.992	0.992	0.993	0.992	644
Tariff 149	1.026	1.023	1.022	1.020	646
Tariff 150	0.978	0.984	0.985	0.985	648
Tariff 151	0.994	0.994	0.993	0.994	8715
Tariff 153	0.957	0.958	0.956	0.957	652
Tariff 154	1.005	1.005	1.004	1.004	653
Tariff 155	1.000	1.000	1.000	1.000	654
Tariff 157	1.012	1.020	1.017	1.018	795
Tariff 158	0.956	0.955	0.956	0.954	796
Tariff 159	1.007	1.007	1.017	1.003	797
Tariff 161	0.992	0.987	0.986	1.029	658
Tariff 162	1.011	1.011	1.011	1.011	655
Tariff 163	1.018	1.032	1.032	1.034	659
Tariff 165	1.199	1.139	1.085	1.008	661
Tariff 166	1.004	1.003	1.003	1.002	624
Tariff 170	0.994	0.993	0.995	0.995	664
Tariff 171	1.001	1.001	1.003	1.003	665
Tariff 172	1.091	1.112	1.119	1.100	778
Tariff 174	1.011	1.010	1.009	1.009	667
Tariff 177	1.000	1.000	1.000	1.000	691
Tariff 178	1.000	1.000	1.000	1.000	691
Tariff 191	1.002	0.999	0.999	0.996	668
Tariff 192	0.980	0.982	0.980	0.980	669
Tariff 194	1.001	1.001	1.002	1.002	780

EHV site specific LLFs					
Demand					
Tariff	Period 1	Period 2	Period 3	Period 4	Associated LLFC / DUoS Tariff ID
Tariff 196	1.010	1.011	1.011	1.011	673
Tariff 197	1.000	1.000	1.000	1.000	647
Tariff 200	1.090	1.101	1.091	1.087	583
Tariff 202	1.000	1.001	1.001	1.000	675
Tariff 203	1.019	1.022	1.022	1.020	676
Tariff 204	1.016	1.018	1.017	1.015	677
Tariff 206	1.002	1.002	1.001	1.000	679
Tariff 207	1.005	1.005	1.005	1.004	680
Tariff 208	0.993	0.995	0.996	0.994	681
Tariff 209	1.006	1.011	1.021	1.007	682
Tariff 212	1.008	1.010	1.010	1.009	692
Tariff 214	1.093	1.088	1.093	1.057	694
Tariff 215	0.996	0.996	0.996	0.996	8720
Tariff 216	0.979	0.979	0.979	0.979	696
Tariff 217	0.969	0.961	0.957	0.968	697
Tariff 221	1.027	1.021	1.017	0.995	656
Tariff 228	1.001	1.001	1.003	1.003	577
Tariff 230	0.977	0.977	0.976	0.976	8719
Tariff 232	1.012	1.011	1.008	1.007	581
Tariff 234	1.054	1.051	1.048	1.051	631
Tariff 235	1.014	1.017	1.014	1.016	636
Tariff 237	1.019	1.019	1.017	1.016	771
Tariff 238	1.000	1.000	1.000	1.000	8707
Tariff 239	1.210	1.218	1.206	1.216	750
Tariff 240	1.007	1.006	1.007	1.006	628
Tariff 241	1.009	1.009	1.009	1.008	781
Tariff 242	1.000	1.000	1.000	1.000	639
Tariff 246	0.996	0.996	0.996	0.996	8722
Tariff 249	1.000	1.000	1.000	1.000	570
Tariff 251	0.951	0.951	0.957	0.954	576
Tariff 252	0.991	0.991	0.991	0.991	580
Tariff 253	1.009	1.006	1.011	1.008	640
Tariff 254	0.954	0.955	0.954	0.954	629
Tariff 255	0.970	0.970	0.964	0.967	8741
Tariff 256	1.004	1.004	1.004	1.003	641
Tariff 257	1.000	1.000	1.000	1.000	782

EHV site specific LLFs					
Demand					
Tariff	Period 1	Period 2	Period 3	Period 4	Associated LLFC / DUoS Tariff ID
Tariff 258	0.999	0.999	0.997	0.997	590
Tariff 259	1.003	1.003	1.003	1.003	645
Tariff 260	1.005	1.004	1.004	1.004	649
Tariff 262	0.970	0.970	0.970	0.970	792
Tariff 263	1.050	1.051	1.050	1.051	734
Tariff 265	1.016	1.016	1.014	1.007	693
Tariff 266	0.985	0.986	0.986	0.986	561
Tariff 269	1.042	1.045	1.054	1.050	695
Tariff 273	1.014	1.014	1.012	1.012	764
Tariff 274	1.000	1.000	1.000	1.000	627
Tariff 277	0.973	0.973	0.972	0.972	698
Tariff 282	1.033	1.034	1.034	1.031	666
Tariff 286	1.046	1.046	1.062	1.062	642
Tariff 287	1.001	1.001	1.000	0.999	699
Tariff 288	0.971	0.971	0.971	0.971	8727
Tariff 289	0.983	0.983	0.983	0.983	702
Tariff 290	1.001	1.001	1.001	1.001	712
Tariff 291	0.974	0.998	1.002	1.002	794
Tariff 292	1.026	1.020	1.024	1.017	716
Tariff 295	1.007	1.007	1.006	1.005	719
Tariff 296	1.002	1.005	1.006	1.003	765
Tariff 299	0.985	0.985	0.985	0.985	585
Tariff 300	0.998	0.998	1.002	1.002	578
Tariff 302	0.980	0.984	0.989	0.987	776
Tariff 303	0.977	1.010	1.023	1.012	657
Tariff 311	0.998	0.998	0.998	0.998	594
Tariff 312	0.999	0.999	0.999	0.999	747
Tariff 317	0.996	0.996	1.008	1.007	757
Tariff 318	0.991	0.991	0.991	0.996	Y15
Tariff 319	0.991	0.991	0.991	0.996	Y13
Tariff 320	0.999	1.000	1.000	1.000	672
Tariff 322	0.992	0.992	0.992	0.992	768
Tariff 327	1.000	1.000	1.000	1.000	674
Tariff 330	0.991	0.991	0.991	0.996	Y07
Tariff 331	1.000	1.000	1.000	1.000	728
Tariff 334	0.993	0.995	0.996	0.995	751

EHV site specific LLFs					
Demand					
Tariff	Period 1	Period 2	Period 3	Period 4	Associated LLFC / DUoS Tariff ID
Tariff 340	1.000	1.000	1.000	1.000	720
Tariff 342	1.002	1.003	1.002	1.002	8752
Tariff 347	0.991	0.991	0.991	0.996	799
Tariff 348	1.008	1.008	1.008	1.007	788
Tariff 350	0.991	0.991	0.991	0.996	Y01
Tariff 355	1.021	1.015	1.019	1.012	721
Tariff 356	0.997	0.990	0.995	0.997	798
Tariff 357	1.026	1.025	1.023	1.020	670
Tariff 358	1.022	1.027	1.048	1.031	759
Tariff 359	1.003	1.006	1.006	1.005	671
Tariff 362	0.990	0.990	0.991	0.989	785
Tariff 363	0.994	0.994	0.996	0.996	643
Tariff 364	1.000	1.000	1.000	1.000	760
Tariff 365	1.001	1.001	1.001	1.001	572
Tariff 367	1.000	1.000	1.000	1.000	8743
Tariff 369	0.999	0.999	0.999	0.999	591
Tariff 372	0.989	0.991	0.988	0.988	663
Tariff 375	0.973	0.972	0.973	0.973	571
Tariff 377	0.981	0.981	0.983	0.983	683
Tariff 379	0.982	0.981	0.982	0.981	733
Tariff 380	0.970	0.970	0.970	0.970	752
Tariff 381	0.973	0.973	0.973	0.973	573
Tariff 382	1.019	1.019	1.019	1.019	770
Tariff 384	1.012	1.013	1.023	1.021	592
Tariff 387	1.013	1.012	1.012	1.010	700
Tariff 389	1.001	1.001	1.001	1.001	593
Tariff 390	0.998	0.999	0.998	0.998	586
Tariff 392	1.003	1.003	1.008	1.013	568
Tariff 393	1.000	0.999	0.999	0.999	579
Tariff 401	0.991	0.991	0.991	0.996	Y16
Tariff 405	0.991	0.991	0.991	0.996	Y14
Tariff 416	1.010	1.009	1.010	1.008	584
Tariff 424	0.991	0.991	0.991	0.996	8770
Tariff 426	0.932	0.943	0.958	0.951	587
Tariff 432	0.991	0.991	0.991	0.996	0052
Tariff 433	0.991	0.991	0.991	0.996	8768

EHV site specific LLFs					
Demand					
Tariff	Period 1	Period 2	Period 3	Period 4	Associated LLFC / DUoS Tariff ID
Tariff 434	0.991	0.991	0.991	0.996	Y02
Tariff 436	0.986	0.986	0.987	0.985	582
Tariff 439	0.991	0.991	0.991	0.996	Y06
Tariff 440	0.987	0.988	0.987	0.987	8760
Tariff 443	1.020	1.030	1.034	1.018	599
Tariff 444	1.004	1.004	1.004	1.003	588
Tariff 445	1.001	1.001	1.001	1.001	574
Tariff 446	1.001	1.001	1.001	1.001	575
Tariff 447	0.991	0.991	0.991	0.996	Y03
Tariff 448	1.055	1.055	1.057	1.052	606
Tariff 451	0.991	0.991	0.991	0.996	Y04
Tariff 452	0.991	0.991	0.991	0.996	Y05
Tariff 453	1.000	1.000	1.000	1.000	690
Tariff 454	0.991	0.991	0.991	0.996	Y08
Tariff 456	0.991	0.991	0.991	0.996	Y10
Tariff 457	0.991	0.991	0.991	0.996	Y11
Tariff 458	0.991	0.991	0.991	0.996	Y12
Tariff 459	1.002	1.002	1.002	1.001	755
Tariff 460	1.001	1.001	1.001	1.001	709
Tariff 462	0.991	0.991	0.991	0.996	Y17
Tariff 463	0.991	0.991	0.991	0.996	Y18
Tariff 464	0.991	0.991	0.991	0.996	Y19
Tariff 465	0.991	0.991	0.991	0.996	Y20
Tariff 466	0.991	0.991	0.991	0.996	8782
Tariff 467	0.991	0.991	0.991	0.996	8784
Tariff 468	0.991	0.991	0.991	0.996	Y21
Tariff 469	0.991	0.991	0.991	0.996	Y23
Tariff 470	0.991	0.991	0.991	0.996	Y24
Tariff 471	0.991	0.991	0.991	0.996	Y25
Tariff 472	0.991	0.991	0.991	0.996	Y26
Tariff 473	0.991	0.991	0.991	0.996	Y27
Tariff 474	0.991	0.991	0.991	0.996	0048
Tariff 475	0.991	0.991	0.991	0.996	Y29
Tariff 477	0.991	0.991	0.991	0.996	Y30
Tariff 478	0.991	0.991	0.991	0.996	Y31

EHV site specific LLFs					
Generation					
Tariff	Period 1	Period 2	Period 3	Period 4	Associated LLFC / DUoS Tariff ID
Tariff 4	1.003	1.003	1.008	1.013	530
Tariff 5	1.003	1.003	1.008	1.013	520
Tariff 6	1.003	1.003	1.008	1.013	520
Tariff 8	1.003	1.003	1.008	1.013	522
Tariff 9	1.003	1.003	1.008	1.013	522
Tariff 10	1.003	1.003	1.008	1.013	522
Tariff 11	1.003	1.003	1.008	1.013	523
Tariff 12	1.003	1.003	1.008	1.013	524
Tariff 14	1.003	1.003	1.008	1.013	526
Tariff 15	1.003	1.003	1.008	1.013	527
Tariff 17	0.998	0.999	0.998	0.998	913
Tariff 18	1.000	1.000	1.000	1.000	914
Tariff 20	1.000	1.000	1.000	1.000	8707
Tariff 21	0.994	0.995	0.993	0.994	917
Tariff 22	0.999	1.001	1.002	1.002	918
Tariff 23	0.997	0.997	0.996	0.996	837
Tariff 24	0.990	0.990	0.990	0.990	8328
Tariff 25	1.014	1.016	1.014	1.014	922
Tariff 26	0.984	0.984	0.982	0.982	8696
Tariff 27	0.992	0.992	0.992	0.992	923
Tariff 28	1.019	1.017	1.017	1.015	924
Tariff 29	1.004	1.004	1.005	1.005	925
Tariff 30	0.991	0.991	0.991	0.991	926
Tariff 31	0.992	0.992	0.992	0.992	8699
Tariff 32	0.992	0.992	0.992	0.992	8699
Tariff 33	0.987	0.988	0.987	0.987	927
Tariff 35	1.002	1.002	1.002	1.002	930
Tariff 36	1.002	1.003	1.002	1.002	931
Tariff 37	0.995	0.992	0.991	0.994	932
Tariff 38	1.002	1.002	1.002	1.002	987
Tariff 39	#N/A	#N/A	#N/A	#N/A	8688
Tariff 40	1.000	1.000	1.000	1.000	935
Tariff 41	1.000	1.000	1.000	1.000	936
Tariff 42	0.987	0.999	1.016	1.009	937
Tariff 43	0.962	0.964	0.995	0.963	938
Tariff 44	0.964	0.965	0.995	0.964	939

EHV site specific LLFs					
Generation					
Tariff	Period 1	Period 2	Period 3	Period 4	Associated LLFC / DUoS Tariff ID
Tariff 45	0.967	0.966	0.964	0.963	940
Tariff 46	1.009	1.010	1.007	1.008	941
Tariff 47	1.011	1.013	1.012	1.011	942
Tariff 48	1.000	1.000	1.000	1.000	943
Tariff 49	0.992	0.993	0.993	0.992	944
Tariff 50	0.977	0.978	0.978	0.973	945
Tariff 51	0.995	0.998	0.996	0.994	946
Tariff 52	0.939	0.938	0.937	0.935	948
Tariff 53	0.992	0.982	0.982	0.980	949
Tariff 54	0.997	0.998	0.997	0.997	953
Tariff 55	0.985	0.984	0.982	0.980	954
Tariff 57	0.922	0.921	0.922	0.920	956
Tariff 58	0.998	0.998	0.998	0.998	958
Tariff 59	1.003	1.003	1.008	1.013	529
Tariff 60	1.202	1.222	1.183	1.174	961
Tariff 61	0.944	0.943	0.945	0.940	8694
Tariff 62	0.944	0.943	0.945	0.940	8694
Tariff 63	0.996	0.996	0.996	0.996	962
Tariff 64	0.953	0.966	0.985	0.977	963
Tariff 65	0.989	0.993	0.994	0.993	967
Tariff 67	0.992	0.992	0.992	0.992	969
Tariff 68	#N/A	#N/A	#N/A	#N/A	8687
Tariff 69	0.989	0.989	0.989	0.989	972
Tariff 70	0.991	0.991	0.991	0.991	973
Tariff 71	0.992	0.992	0.992	0.992	974
Tariff 72	0.986	0.987	0.986	0.986	833
Tariff 73	0.990	0.990	0.990	0.990	975
Tariff 74	0.892	0.890	0.889	0.887	977
Tariff 75	0.987	0.987	0.987	0.987	979
Tariff 79	0.990	0.992	0.991	0.991	983
Tariff 80	0.990	0.992	0.991	0.991	984
Tariff 81	0.993	0.996	0.988	0.984	985
Tariff 82	0.987	0.987	0.985	0.983	986
Tariff 83	#N/A	#N/A	#N/A	#N/A	8689
Tariff 84	#N/A	#N/A	#N/A	#N/A	8689
Tariff 85	0.998	0.997	0.997	0.995	989

EHV site specific LLFs					
Generation					
Tariff	Period 1	Period 2	Period 3	Period 4	Associated LLFC / DUoS Tariff ID
Tariff 86	0.998	0.998	0.998	0.998	991
Tariff 87	0.977	0.978	0.977	0.977	8740
Tariff 88	1.003	1.004	1.003	1.002	807
Tariff 89	0.994	0.994	0.994	0.994	808
Tariff 90	1.073	1.078	1.079	1.075	929
Tariff 91	1.155	1.156	1.161	1.142	809
Tariff 93	1.011	1.011	1.012	1.011	810
Tariff 94	1.006	1.007	1.007	1.005	811
Tariff 95	1.003	1.005	1.006	1.002	812
Tariff 96	1.026	1.026	1.032	1.024	813
Tariff 97	1.015	1.010	1.014	1.008	814
Tariff 98	1.020	1.017	1.017	1.015	815
Tariff 106	1.003	1.006	1.005	1.002	855
Tariff 112	1.000	1.000	1.000	1.000	838
Tariff 128	1.003	1.009	1.006	1.005	816
Tariff 129	1.030	1.025	1.052	1.029	817
Tariff 130	1.059	1.058	1.085	1.057	818
Tariff 131	1.014	1.014	1.019	1.014	819
Tariff 132	0.971	0.971	0.971	0.971	820
Tariff 133	1.044	1.047	1.041	1.039	821
Tariff 134	0.998	0.998	0.998	0.998	822
Tariff 135	1.208	1.241	1.196	1.194	823
Tariff 136	1.000	1.001	1.001	1.001	825
Tariff 137	1.001	1.001	1.001	1.001	826
Tariff 138	0.996	0.996	0.997	0.996	966
Tariff 140	0.988	0.988	0.988	0.988	8710
Tariff 141	0.995	0.995	0.995	0.995	830
Tariff 143	0.989	0.989	0.989	0.989	834
Tariff 144	0.973	0.974	0.974	0.972	835
Tariff 146	0.980	0.980	0.980	0.980	990
Tariff 147	0.989	0.989	0.988	0.988	844
Tariff 149	1.020	1.017	1.016	1.013	846
Tariff 150	0.970	0.975	0.975	0.975	848
Tariff 151	0.994	0.994	0.993	0.994	8715
Tariff 153	0.934	0.935	0.934	0.934	852
Tariff 154	1.003	1.003	1.002	1.002	853

EHV site specific LLFs					
Generation					
Tariff	Period 1	Period 2	Period 3	Period 4	Associated LLFC / DUoS Tariff ID
Tariff 155	0.996	0.996	0.995	0.995	854
Tariff 157	1.008	1.015	1.012	1.013	859
Tariff 158	0.956	0.953	0.948	0.952	860
Tariff 159	0.980	0.977	0.980	0.978	8717
Tariff 161	0.986	0.986	0.986	0.986	863
Tariff 162	0.999	0.999	0.999	0.991	864
Tariff 163	0.980	0.980	0.979	0.980	865
Tariff 165	1.191	1.181	1.145	1.086	867
Tariff 166	1.002	1.002	1.001	1.001	824
Tariff 170	0.990	0.990	0.990	0.990	870
Tariff 171	0.998	0.997	0.997	0.997	871
Tariff 172	1.030	1.030	1.028	1.016	978
Tariff 174	1.007	1.006	1.005	1.005	873
Tariff 179	1.003	1.003	1.008	1.013	528
Tariff 180	1.003	1.003	1.008	1.013	528
Tariff 181	1.003	1.003	1.008	1.013	528
Tariff 182	1.003	1.003	1.008	1.013	528
Tariff 183	1.003	1.003	1.008	1.013	528
Tariff 184	1.003	1.003	1.008	1.013	528
Tariff 185	1.003	1.003	1.008	1.013	528
Tariff 186	1.003	1.003	1.008	1.013	528
Tariff 187	1.003	1.003	1.008	1.013	528
Tariff 188	1.000	1.000	1.000	1.000	843
Tariff 189	1.000	1.000	1.000	1.000	843
Tariff 190	1.000	1.000	1.000	1.000	843
Tariff 191	1.003	1.000	0.999	0.996	874
Tariff 192	0.950	0.950	0.949	0.950	875
Tariff 194	0.992	0.992	0.992	0.992	980
Tariff 196	1.003	1.004	1.004	1.004	879
Tariff 197	0.994	0.994	0.993	0.994	847
Tariff 202	0.997	0.997	0.997	0.997	881
Tariff 203	0.986	0.988	0.988	0.987	882
Tariff 204	0.997	0.999	0.996	0.994	883
Tariff 206	0.992	0.992	0.991	0.990	885
Tariff 207	1.004	1.004	1.004	1.006	886
Tariff 208	0.996	0.996	0.996	0.996	887

EHV site specific LLFs					
Generation					
Tariff	Period 1	Period 2	Period 3	Period 4	Associated LLFC / DUoS Tariff ID
Tariff 209	0.948	0.947	0.950	0.948	888
Tariff 212	0.990	0.992	0.992	0.992	891
Tariff 214	1.082	1.058	1.079	1.067	893
Tariff 215	0.996	0.996	0.996	0.996	8720
Tariff 216	0.977	0.976	0.976	0.976	895
Tariff 217	0.961	0.953	0.949	0.960	896
Tariff 221	1.029	1.008	1.003	0.980	856
Tariff 230	0.977	0.977	0.976	0.976	8719
Tariff 232	1.009	1.007	1.008	1.006	908
Tariff 234	1.057	1.054	1.050	1.054	831
Tariff 235	1.005	1.008	1.006	1.007	836
Tariff 237	1.013	1.013	1.011	1.010	971
Tariff 238	1.000	1.000	1.000	1.000	8707
Tariff 240	0.985	0.985	0.985	0.985	828
Tariff 241	1.003	1.004	1.000	0.999	981
Tariff 242	1.000	1.000	1.000	1.000	839
Tariff 246	0.996	0.996	0.996	0.996	8722
Tariff 249	0.961	0.961	0.961	0.960	970
Tariff 251	0.947	0.947	0.952	0.949	876
Tariff 252	0.982	0.982	0.982	0.982	880
Tariff 253	1.008	1.006	1.008	1.008	840
Tariff 254	0.947	0.947	0.947	0.946	829
Tariff 255	0.970	0.970	0.964	0.967	8741
Tariff 256	1.004	1.004	1.004	1.003	841
Tariff 257	0.994	0.994	0.994	0.994	982
Tariff 258	0.974	0.974	0.973	0.973	531
Tariff 259	0.993	0.994	0.993	0.993	845
Tariff 260	1.003	0.999	0.999	1.002	849
Tariff 262	0.969	0.969	0.969	0.969	992
Tariff 263	0.986	0.985	0.987	0.990	934
Tariff 265	1.005	1.002	0.999	0.996	933
Tariff 266	0.983	0.983	0.983	0.983	521
Tariff 269	1.016	1.020	1.029	1.025	995
Tariff 273	0.995	0.995	0.994	0.993	964
Tariff 274	0.987	0.987	0.987	0.987	827
Tariff 277	0.962	0.963	0.960	0.957	898

EHV site specific LLFs					
Generation					
Tariff	Period 1	Period 2	Period 3	Period 4	Associated LLFC / DUoS Tariff ID
Tariff 282	1.038	1.040	1.035	1.034	996
Tariff 286	1.038	1.038	1.053	1.053	842
Tariff 287	0.999	0.998	0.998	0.997	899
Tariff 288	0.971	0.971	0.971	0.971	8727
Tariff 289	0.976	0.976	0.977	0.976	902
Tariff 290	0.995	0.995	0.995	0.995	912
Tariff 291	0.974	0.997	1.001	1.001	994
Tariff 292	1.026	1.019	1.024	1.017	916
Tariff 295	1.007	1.005	1.004	1.004	919
Tariff 296	1.002	1.006	1.006	1.002	965
Tariff 299	0.974	0.973	0.974	0.973	8755
Tariff 300	0.998	0.998	1.002	1.002	535
Tariff 302	0.975	0.978	0.984	0.981	976
Tariff 303	0.975	1.008	1.021	1.010	857
Tariff 311	0.993	0.992	0.992	0.997	533
Tariff 312	0.996	0.996	0.996	0.996	947
Tariff 317	0.996	0.997	1.008	1.007	957
Tariff 318	0.991	0.991	0.991	0.996	Z15
Tariff 319	0.991	0.991	0.991	0.996	Z13
Tariff 320	1.000	1.000	1.000	1.000	872
Tariff 322	0.990	0.990	0.989	0.991	968
Tariff 327	0.970	0.970	0.969	0.969	894
Tariff 330	0.991	0.991	0.991	0.996	Z07
Tariff 331	0.995	0.995	0.995	0.995	878
Tariff 334	0.949	0.950	0.950	0.950	911
Tariff 340	0.999	0.996	0.996	0.999	920
Tariff 342	1.000	1.001	1.000	1.000	8756
Tariff 348	1.007	1.005	1.002	1.006	988
Tariff 350	0.991	0.991	0.991	0.996	Z01
Tariff 355	1.020	1.014	1.019	1.012	921
Tariff 356	0.992	0.990	0.992	0.992	998
Tariff 357	1.021	1.019	1.018	1.015	8738
Tariff 358	0.972	1.024	1.045	1.028	959
Tariff 359	1.003	1.004	1.003	1.004	901
Tariff 362	0.984	0.984	0.984	0.984	905
Tariff 364	0.998	0.998	0.998	0.998	8737

EHV site specific LLFs					
Generation					
Tariff	Period 1	Period 2	Period 3	Period 4	Associated LLFC / DUoS Tariff ID
Tariff 365	1.001	1.001	1.001	1.001	862
Tariff 367	1.000	1.000	1.000	1.000	8743
Tariff 369	0.977	0.977	0.977	0.977	8757
Tariff 372	0.980	0.979	0.980	0.980	897
Tariff 375	0.970	0.970	0.970	0.970	861
Tariff 377	0.960	0.961	0.961	0.961	907
Tariff 379	0.960	0.960	0.961	0.961	997
Tariff 380	0.969	0.969	0.969	0.969	892
Tariff 381	0.972	0.972	0.972	0.972	993
Tariff 387	0.996	0.995	0.995	0.986	858
Tariff 389	0.969	0.968	0.965	0.965	532
Tariff 390	0.986	0.987	0.987	0.987	536
Tariff 392	1.003	1.003	1.008	1.013	538
Tariff 393	0.976	0.976	0.976	0.976	8764
Tariff 401	0.991	0.991	0.991	0.996	Z16
Tariff 405	0.991	0.991	0.991	0.996	Z14
Tariff 416	1.006	1.005	1.004	1.002	534
Tariff 424	0.991	0.991	0.991	0.996	8771
Tariff 426	0.931	0.942	0.956	0.950	537
Tariff 432	0.991	0.991	0.991	0.996	0053
Tariff 433	0.991	0.991	0.991	0.996	8769
Tariff 434	0.991	0.991	0.991	0.996	Z02
Tariff 436	0.978	0.978	0.979	0.977	869
Tariff 439	0.991	0.991	0.991	0.996	Z06
Tariff 440	0.987	0.988	0.987	0.987	8760
Tariff 443	0.995	1.009	1.015	1.005	540
Tariff 444	1.001	1.001	1.000	1.000	539
Tariff 445	1.000	1.002	1.002	1.002	955
Tariff 446	0.999	0.999	0.999	0.999	889
Tariff 447	0.991	0.991	0.991	0.996	Z03
Tariff 448	1.035	1.035	1.033	1.029	877
Tariff 451	0.991	0.991	0.991	0.996	Z04
Tariff 454	0.991	0.991	0.991	0.996	Z08
Tariff 455	0.991	0.991	0.991	0.996	Z09
Tariff 456	0.991	0.991	0.991	0.996	Z10
Tariff 457	0.991	0.991	0.991	0.996	Z11

EHV site specific LLFs					
Generation					
Tariff	Period 1	Period 2	Period 3	Period 4	Associated LLFC / DUoS Tariff ID
Tariff 458	0.991	0.991	0.991	0.996	Z12
Tariff 459	0.999	0.999	0.999	0.998	904
Tariff 462	0.991	0.991	0.991	0.996	Z17
Tariff 463	0.991	0.991	0.991	0.996	Z18
Tariff 465	0.991	0.991	0.991	0.996	Z20
Tariff 466	0.991	0.991	0.991	0.996	8783
Tariff 467	0.991	0.991	0.991	0.996	8785
Tariff 468	0.991	0.991	0.991	0.996	Z21
Tariff 469	0.991	0.991	0.991	0.996	Z23
Tariff 470	0.991	0.991	0.991	0.996	Z24
Tariff 471	0.991	0.991	0.991	0.996	Z25
Tariff 472	0.991	0.991	0.991	0.996	Z26
Tariff 473	0.991	0.991	0.991	0.996	Z27
Tariff 474	0.991	0.991	0.991	0.996	0049
Tariff 475	0.991	0.991	0.991	0.996	Z29
Tariff 478	0.991	0.991	0.991	0.996	Z31

Annex 6 – Charges for New or Amended Designated EHV Properties

Note: The list of MPANs / MSIDs provided may be incomplete; the DNO reserves the right to apply the listed charges to any other MPANs / MSIDs associated with the site.

Scottish Hydro Electric Power Distribution plc - Effective from 1 April 2026 - Final new or amended designated EHV charges

Effective from date	Import LLFC / DUoS Tariff ID	Import MPANs/MSIDs	Export LLFC / DUoS Tariff ID	Export MPANs/MSIDs	Name	Residual Charging Band	Import Super Red unit charge (p/kWh)	Import fixed charge (p/day)	Import capacity charge (p/kVA/day)	Import exceeded capacity charge (p/kVA/day)	Export Super Red unit charge (p/kWh)	Export fixed charge (p/day)	Export capacity charge (p/kVA/day)	Export exceeded capacity charge (p/kVA/day)
01/04/26	593	1700053187039	532	1700053187048	Tariff 389			1,102.73	1.44	1.44		59,489.97	0.05	0.05
01/04/26	Y30	1700060236781			Tariff 477	1		1,595.60	1.12	1.12				
01/04/26	Y29	1700060223444	Z29	1700060223453	Tariff 475		-	3,714.62	5.66	5.66		1,648.35	0.05	0.05
01/04/26	799	1700060267549	960	1700060267558	Tariff 347			7.76	1.04	1.04		2,860.27	0.05	0.05
01/04/26	799	1700060279688			Tariff 487	1		1,304.80	0.88	0.88				
01/01/27	799	1700060279688			Tariff 487	1		1,304.83	1.06	1.06				
01/04/26	8797	8797	8798	8798	Tariff 476			3,302.48	0.76	0.76		3,302.48	0.05	0.05
01/04/26	567	1700052157576	527	1700052157585	Tariff 15			19.04	1.20	1.20		275.51	0.05	0.05
01/04/26	8707	8707	8707	8707	Tariff 20			0.50	2.25	2.25				
01/04/26	8328	8328	8328	8328	Tariff 24			67.31	1.98	1.98		30,964.00	0.05	0.05
01/04/26	8696	8696	8696	8696	Tariff 26			4.79	1.54	1.54				
01/04/26	8707	8707	8707	8707	Tariff 238			4.38	0.83	0.83				

Effective from date	Import LLFC / DUoS Tariff ID	Import MPANs/MSIDs	Export LLFC / DUoS Tariff ID	Export MPANs/MSIDs	Name	Residual Charging Band	Import Super Red unit charge (p/kWh)	Import fixed charge (p/day)	Import capacity charge (p/kVA/day)	Import exceeded capacity charge (p/kVA/day)	Export Super Red unit charge (p/kWh)	Export fixed charge (p/day)	Export capacity charge (p/kVA/day)	Export exceeded capacity charge (p/kVA/day)
01/04/26	8743	8743	8743	8743	Tariff 367			16.07	1.31	1.31		964.61	0.05	0.05
01/04/26	568	1700053141762, 1700053152392	538	1700053141771, 1700053152408	Tariff 392	1		18,073.68	1.14	1.14		4,819.65	0.05	0.05
01/04/26	Y31	1700060238812	Z31	1700060238821	Tariff 478			5.40	1.04	1.04		2,422.91	0.05	0.05
06/04/26	799	1700060238706	960	1700060238715	Tariff 480			1,537.47	0.76	0.76		1,618.38	0.05	0.05
08/05/26	799	1700060280976	960	1700060280985	Tariff 481			5,848.22	0.78	0.78		6,156.02	0.05	0.05
01/04/26	732	1700060307397	932	1700052959680	Tariff 488			89.20	0.98	0.98		447.08	0.05	0.05
01/04/26	732	1700060307402	932	1700052959671	Tariff 489			97.28	0.98	0.98		975.28	0.05	0.05
01/04/26	732	1700060307411	932	1700052959690	Tariff 490			100.88	0.98	0.98		1,507.97	0.05	0.05

Scottish Hydro Electric Power Distribution plc - Effective from 1 April 2026 - Final new or amended designated EHV line loss factors															
Effective from date	Import LLFC / DUoS Tariff ID	Import MPANs/MSIDs	Export LLFC / DUoS Tariff ID	Export MPANs/MSIDs	Name	Residual Charging Band	Import LLF period 1	Import LLF period 2	Import LLF period 3	Import LLF period 4	Export LLF period 1	Export LLF period 2	Export LLF period 3	Export LLF period 4
01/04/26	799	1700060267549	960	1700060267558	Tariff 347		0.991	0.991	0.991	0.996	0.991	0.991	0.991	0.996
01/04/26	799	1700060279688			Tariff 487	1	0.991	0.991	0.991	0.996				
01/04/26	8797	8797	8798	8798	Tariff 476		0.991	0.991	0.991	0.996	0.991	0.991	0.991	0.996
01/04/26	Y31	1700060238812	Z31	1700060238821	Tariff 478		0.991	0.991	0.991	0.996	0.991	0.991	0.991	0.996
06/04/26	799	1700060238706	960	1700060238715	Tariff 480		0.991	0.991	0.991	0.996	0.991	0.991	0.991	0.996
08/05/26	799	1700060280976	960	1700060280985	Tariff 481		0.991	0.991	0.991	0.996	0.991	0.991	0.991	0.996
01/04/26	732	1700060307397	932	1700052959680	Tariff 488		1.003	1.003	1.003	1.002	0.995	0.992	0.991	0.994
01/04/26	732	1700060307402	932	1700052959671	Tariff 489		1.003	1.003	1.003	1.002	0.995	0.992	0.991	0.994
01/04/26	732	1700060307411	932	1700052959690	Tariff 490		1.003	1.003	1.003	1.002	0.995	0.992	0.991	0.994

Annex 7 – Final Supplier of last Resort and Eligible Bad Debt Pass-Through Costs

Scottish Hydro Electric Power Distribution plc - Effective from 1 April 2026 - Final Supplier of Last Resort and Eligible Bad Debt Pass-Through Costs

Tariff name	Open LLFCs / DUoS Tariff IDs / LDNO unique billing identifier	PCs	Supplier of Last Resort Fixed charge adder* p/MPAN/day	Eligible Bad Debt Fixed charge adder** p/MPAN/day
Domestic Aggregated or CT with Residual	15, 18, 25, 27, 33, 100-101, 105-106, 110-111, 120-121, 125-128, 300-301, 305, 320-321, 325, 506	0, 1, 2	0.00	0.00
Non-Domestic Aggregated or CT No Residual	34, P60, P65, P70, P00, R35, R40, P05, P10, P15, P20, P25, P30, P35, P40, R45, P45, P50, P55, R50, P75, R55, R60, R65, R70, R75, R80, R85, R90, R95, S05, S10	0, 3, 4, 5-8		0.00

Tariff name	Open LLFCs / DUoS Tariff IDs / LDNO unique billing identifier	PCs	Supplier of Last Resort Fixed charge adder* p/MPAN/day	Eligible Bad Debt Fixed charge adder** p/MPAN/day
Non-Domestic Aggregated or CT Band 1	35, P61, P66, P71, P01, R36, R41, P06, P11, P16, P21, P26, P31, P36, P41, R46, P46, P51, P56, R51, P76, R56, R61, R66, R71, R76, R81, R86, R91, R96, S06, S11	0, 3, 4, 5-8		0.00
Non-Domestic Aggregated or CT Band 2	36, P62, P67, P72, P02, R37, R42, P07, P12, P17, P22, P27, P32, P37, P42, R47, P47, P52, P57, R52, P77, R57, R62, R67, R72, R77, R82, R87, R92, R97, S07, S12	0, 3, 4, 5-8		0.00

Tariff name	Open LLFCs / DUoS Tariff IDs / LDNO unique billing identifier	PCs	Supplier of Last Resort Fixed charge adder* p/MPAN/day	Eligible Bad Debt Fixed charge adder** p/MPAN/day
Non-Domestic Aggregated or CT Band 3	37, P63, P68, P73, P03, R38, R43, P08, P13, P18, P23, P28, P33, P38, P43, R48, P48, P53, P58, R53, P78, R58, R63, R68, R73, R78, R83, R88, R93, R98, S08, S13	0, 3, 4, 5-8		0.00
Non-Domestic Aggregated or CT Band 4	38, P64, P69, P74, P04, R39, R44, P09, P14, P19, P24, P29, P34, P39, P44, R49, P49, P54, P59, R54, P79, R59, R64, R69, R74, R79, R84, R89, R94, R99, S09, S14	0, 3, 4, 5-8		0.00
LV Site Specific No Residual	P80	0		0.00

Tariff name	Open LLFCs / DUoS Tariff IDs / LDNO unique billing identifier	PCs	Supplier of Last Resort Fixed charge adder* p/MPAN/day	Eligible Bad Debt Fixed charge adder** p/MPAN/day
LV Site Specific Band 1	P81	0		0.00
LV Site Specific Band 2	P82	0		0.00
LV Site Specific Band 3	P83	0		0.00
LV Site Specific Band 4	P84	0		0.00
LV Sub Site Specific No Residual	P85	0		0.00
LV Sub Site Specific Band 1	P86	0		0.00
LV Sub Site Specific Band 2	P87	0		0.00
LV Sub Site Specific Band 3	P88	0		0.00
LV Sub Site Specific Band 4	P89	0		0.00
HV Site Specific No Residual	P90	0		0.00
HV Site Specific Band 1	P91	0		0.00
HV Site Specific Band 2	P92	0		0.00

Tariff name	Open LLFCs / DUoS Tariff IDs / LDNO unique billing identifier	PCs	Supplier of Last Resort Fixed charge adder* p/MPAN/day	Eligible Bad Debt Fixed charge adder** p/MPAN/day
HV Site Specific Band 3	P93	0		0.00
HV Site Specific Band 4	P94	0		0.00
LDNO LV: Domestic Aggregated or CT with Residual		0, 1, 2	0.00	0.00
LDNO LV: Non-Domestic Aggregated or CT No Residual		0, 3, 4, 5-8		0.00
LDNO LV: Non-Domestic Aggregated or CT Band 1		0, 3, 4, 5-8		0.00
LDNO LV: Non-Domestic Aggregated or CT Band 2		0, 3, 4, 5-8		0.00
LDNO LV: Non-Domestic Aggregated or CT Band 3		0, 3, 4, 5-8		0.00
LDNO LV: Non-Domestic Aggregated or CT Band 4		0, 3, 4, 5-8		0.00
LDNO LV: LV Site Specific No Residual		0		0.00
LDNO LV: LV Site Specific Band 1		0		0.00
LDNO LV: LV Site Specific Band 2		0		0.00
LDNO LV: LV Site Specific Band 3		0		0.00

Tariff name	Open LLFCs / DUoS Tariff IDs / LDNO unique billing identifier	PCs	Supplier of Last Resort Fixed charge adder* p/MPAN/day	Eligible Bad Debt Fixed charge adder** p/MPAN/day
LDNO LV: LV Site Specific Band 4		0		0.00
LDNO HV: Domestic Aggregated or CT with Residual		0, 1, 2	0.00	0.00
LDNO HV: Non-Domestic Aggregated or CT No Residual		0, 3, 4, 5-8		0.00
LDNO HV: Non-Domestic Aggregated or CT Band 1		0, 3, 4, 5-8		0.00
LDNO HV: Non-Domestic Aggregated or CT Band 2		0, 3, 4, 5-8		0.00
LDNO HV: Non-Domestic Aggregated or CT Band 3		0, 3, 4, 5-8		0.00
LDNO HV: Non-Domestic Aggregated or CT Band 4		0, 3, 4, 5-8		0.00
LDNO HV: LV Site Specific No Residual		0		0.00
LDNO HV: LV Site Specific Band 1		0		0.00
LDNO HV: LV Site Specific Band 2		0		0.00
LDNO HV: LV Site Specific Band 3		0		0.00
LDNO HV: LV Site Specific Band 4		0		0.00

Tariff name	Open LLFCs / DUoS Tariff IDs / LDNO unique billing identifier	PCs	Supplier of Last Resort Fixed charge adder* p/MPAN/day	Eligible Bad Debt Fixed charge adder** p/MPAN/day
LDNO HV: LV Sub Site Specific No Residual		0		0.00
LDNO HV: LV Sub Site Specific Band 1		0		0.00
LDNO HV: LV Sub Site Specific Band 2		0		0.00
LDNO HV: LV Sub Site Specific Band 3		0		0.00
LDNO HV: LV Sub Site Specific Band 4		0		0.00
LDNO HV: HV Site Specific No Residual		0		0.00
LDNO HV: HV Site Specific Band 1		0		0.00
LDNO HV: HV Site Specific Band 2		0		0.00
LDNO HV: HV Site Specific Band 3		0		0.00
LDNO HV: HV Site Specific Band 4		0		0.00
LDNO HVplus: Domestic Aggregated or CT with Residual		0, 1, 2	0.00	0.00
LDNO HVplus: Non-Domestic Aggregated or CT No Residual		0, 3, 4, 5-8		0.00

Tariff name	Open LLFCs / DUoS Tariff IDs / LDNO unique billing identifier	PCs	Supplier of Last Resort Fixed charge adder* p/MPAN/day	Eligible Bad Debt Fixed charge adder** p/MPAN/day
LDNO HVplus: Non-Domestic Aggregated or CT Band 1		0, 3, 4, 5-8		0.00
LDNO HVplus: Non-Domestic Aggregated or CT Band 2		0, 3, 4, 5-8		0.00
LDNO HVplus: Non-Domestic Aggregated or CT Band 3		0, 3, 4, 5-8		0.00
LDNO HVplus: Non-Domestic Aggregated or CT Band 4		0, 3, 4, 5-8		0.00
LDNO HVplus: LV Site Specific No Residual		0		0.00
LDNO HVplus: LV Site Specific Band 1		0		0.00
LDNO HVplus: LV Site Specific Band 2		0		0.00
LDNO HVplus: LV Site Specific Band 3		0		0.00
LDNO HVplus: LV Site Specific Band 4		0		0.00
LDNO HVplus: LV Sub Site Specific No Residual		0		0.00
LDNO HVplus: LV Sub Site Specific Band 1		0		0.00
LDNO HVplus: LV Sub Site Specific Band 2		0		0.00

Tariff name	Open LLFCs / DUoS Tariff IDs / LDNO unique billing identifier	PCs	Supplier of Last Resort Fixed charge adder* p/MPAN/day	Eligible Bad Debt Fixed charge adder** p/MPAN/day
LDNO HVplus: LV Sub Site Specific Band 3		0		0.00
LDNO HVplus: LV Sub Site Specific Band 4		0		0.00
LDNO HVplus: HV Site Specific No Residual		0		0.00
LDNO HVplus: HV Site Specific Band 1		0		0.00
LDNO HVplus: HV Site Specific Band 2		0		0.00
LDNO HVplus: HV Site Specific Band 3		0		0.00
LDNO HVplus: HV Site Specific Band 4		0		0.00
LDNO EHV: Domestic Aggregated or CT with Residual		0, 1, 2	0.00	0.00
LDNO EHV: Non-Domestic Aggregated or CT No Residual		0, 3, 4, 5-8		0.00
LDNO EHV: Non-Domestic Aggregated or CT Band 1		0, 3, 4, 5-8		0.00
LDNO EHV: Non-Domestic Aggregated or CT Band 2		0, 3, 4, 5-8		0.00
LDNO EHV: Non-Domestic Aggregated or CT Band 3		0, 3, 4, 5-8		0.00

Tariff name	Open LLFCs / DUoS Tariff IDs / LDNO unique billing identifier	PCs	Supplier of Last Resort Fixed charge adder* p/MPAN/day	Eligible Bad Debt Fixed charge adder** p/MPAN/day
LDNO EHV: Non-Domestic Aggregated or CT Band 4		0, 3, 4, 5-8		0.00
LDNO EHV: LV Site Specific No Residual		0		0.00
LDNO EHV: LV Site Specific Band 1		0		0.00
LDNO EHV: LV Site Specific Band 2		0		0.00
LDNO EHV: LV Site Specific Band 3		0		0.00
LDNO EHV: LV Site Specific Band 4		0		0.00
LDNO EHV: LV Sub Site Specific No Residual		0		0.00
LDNO EHV: LV Sub Site Specific Band 1		0		0.00
LDNO EHV: LV Sub Site Specific Band 2		0		0.00
LDNO EHV: LV Sub Site Specific Band 3		0		0.00
LDNO EHV: LV Sub Site Specific Band 4		0		0.00
LDNO EHV: HV Site Specific No Residual		0		0.00

Tariff name	Open LLFCs / DUoS Tariff IDs / LDNO unique billing identifier	PCs	Supplier of Last Resort Fixed charge adder* p/MPAN/day	Eligible Bad Debt Fixed charge adder** p/MPAN/day
LDNO EHV: HV Site Specific Band 1		0		0.00
LDNO EHV: HV Site Specific Band 2		0		0.00
LDNO EHV: HV Site Specific Band 3		0		0.00
LDNO EHV: HV Site Specific Band 4		0		0.00
LDNO 132kV/EHV: Domestic Aggregated or CT with Residual		0, 1, 2	0.00	0.00
LDNO 132kV/EHV: Non-Domestic Aggregated or CT No Residual		0, 3, 4, 5-8		0.00
LDNO 132kV/EHV: Non-Domestic Aggregated or CT Band 1		0, 3, 4, 5-8		0.00
LDNO 132kV/EHV: Non-Domestic Aggregated or CT Band 2		0, 3, 4, 5-8		0.00
LDNO 132kV/EHV: Non-Domestic Aggregated or CT Band 3		0, 3, 4, 5-8		0.00
LDNO 132kV/EHV: Non-Domestic Aggregated or CT Band 4		0, 3, 4, 5-8		0.00
LDNO 132kV/EHV: LV Site Specific No Residual		0		0.00
LDNO 132kV/EHV: LV Site Specific Band 1		0		0.00

Tariff name	Open LLFCs / DUoS Tariff IDs / LDNO unique billing identifier	PCs	Supplier of Last Resort Fixed charge adder* p/MPAN/day	Eligible Bad Debt Fixed charge adder** p/MPAN/day
LDNO 132kV/EHV: LV Site Specific Band 2		0		0.00
LDNO 132kV/EHV: LV Site Specific Band 3		0		0.00
LDNO 132kV/EHV: LV Site Specific Band 4		0		0.00
LDNO 132kV/EHV: LV Sub Site Specific No Residual		0		0.00
LDNO 132kV/EHV: LV Sub Site Specific Band 1		0		0.00
LDNO 132kV/EHV: LV Sub Site Specific Band 2		0		0.00
LDNO 132kV/EHV: LV Sub Site Specific Band 3		0		0.00
LDNO 132kV/EHV: LV Sub Site Specific Band 4		0		0.00
LDNO 132kV/EHV: HV Site Specific No Residual		0		0.00
LDNO 132kV/EHV: HV Site Specific Band 1		0		0.00
LDNO 132kV/EHV: HV Site Specific Band 2		0		0.00
LDNO 132kV/EHV: HV Site Specific Band 3		0		0.00

Tariff name	Open LLFCs / DUoS Tariff IDs / LDNO unique billing identifier	PCs	Supplier of Last Resort Fixed charge adder* p/MPAN/day	Eligible Bad Debt Fixed charge adder** p/MPAN/day
LDNO 132kV/EHV: HV Site Specific Band 4		0		0.00
LDNO 132kV: Domestic Aggregated or CT with Residual		0, 1, 2	0.00	0.00
LDNO 132kV: Non-Domestic Aggregated or CT No Residual		0, 3, 4, 5-8		0.00
LDNO 132kV: Non-Domestic Aggregated or CT Band 1		0, 3, 4, 5-8		0.00
LDNO 132kV: Non-Domestic Aggregated or CT Band 2		0, 3, 4, 5-8		0.00
LDNO 132kV: Non-Domestic Aggregated or CT Band 3		0, 3, 4, 5-8		0.00
LDNO 132kV: Non-Domestic Aggregated or CT Band 4		0, 3, 4, 5-8		0.00
LDNO 132kV: LV Site Specific No Residual		0		0.00
LDNO 132kV: LV Site Specific Band 1		0		0.00
LDNO 132kV: LV Site Specific Band 2		0		0.00
LDNO 132kV: LV Site Specific Band 3		0		0.00
LDNO 132kV: LV Site Specific Band 4		0		0.00

Tariff name	Open LLFCs / DUoS Tariff IDs / LDNO unique billing identifier	PCs	Supplier of Last Resort Fixed charge adder* p/MPAN/day	Eligible Bad Debt Fixed charge adder** p/MPAN/day
LDNO 132kV: LV Sub Site Specific No Residual		0		0.00
LDNO 132kV: LV Sub Site Specific Band 1		0		0.00
LDNO 132kV: LV Sub Site Specific Band 2		0		0.00
LDNO 132kV: LV Sub Site Specific Band 3		0		0.00
LDNO 132kV: LV Sub Site Specific Band 4		0		0.00
LDNO 132kV: HV Site Specific No Residual		0		0.00
LDNO 132kV: HV Site Specific Band 1		0		0.00
LDNO 132kV: HV Site Specific Band 2		0		0.00
LDNO 132kV: HV Site Specific Band 3		0		0.00
LDNO 132kV: HV Site Specific Band 4		0		0.00
LDNO 0000: Domestic Aggregated or CT with Residual		0, 1, 2	0.00	0.00
LDNO 0000: Non-Domestic Aggregated or CT No Residual		0, 3, 4, 5-8		0.00

Tariff name	Open LLFCs / DUoS Tariff IDs / LDNO unique billing identifier	PCs	Supplier of Last Resort Fixed charge adder* p/MPAN/day	Eligible Bad Debt Fixed charge adder** p/MPAN/day
LDNO 0000: Non-Domestic Aggregated or CT Band 1		0, 3, 4, 5-8		0.00
LDNO 0000: Non-Domestic Aggregated or CT Band 2		0, 3, 4, 5-8		0.00
LDNO 0000: Non-Domestic Aggregated or CT Band 3		0, 3, 4, 5-8		0.00
LDNO 0000: Non-Domestic Aggregated or CT Band 4		0, 3, 4, 5-8		0.00
LDNO 0000: LV Site Specific No Residual		0		0.00
LDNO 0000: LV Site Specific Band 1		0		0.00
LDNO 0000: LV Site Specific Band 2		0		0.00
LDNO 0000: LV Site Specific Band 3		0		0.00
LDNO 0000: LV Site Specific Band 4		0		0.00
LDNO 0000: LV Sub Site Specific No Residual		0		0.00
LDNO 0000: LV Sub Site Specific Band 1		0		0.00
LDNO 0000: LV Sub Site Specific Band 2		0		0.00

Tariff name	Open LLFCs / DUoS Tariff IDs / LDNO unique billing identifier	PCs	Supplier of Last Resort Fixed charge adder* p/MPAN/day	Eligible Bad Debt Fixed charge adder** p/MPAN/day
LDNO 0000: LV Sub Site Specific Band 3		0		0.00
LDNO 0000: LV Sub Site Specific Band 4		0		0.00
LDNO 0000: HV Site Specific No Residual		0		0.00
LDNO 0000: HV Site Specific Band 1		0		0.00
LDNO 0000: HV Site Specific Band 2		0		0.00
LDNO 0000: HV Site Specific Band 3		0		0.00
LDNO 0000: HV Site Specific Band 4		0		0.00

*Supplier of Last Resort pass-through costs allocated to all domestic tariffs with a fixed charge (including LDNO)
**Eligible Bad Debt pass-through costs allocated to all metered demand tariffs (including LDNO)