Southern Electric Power Distribution plc

Use of System Charging Statement

NOTICE OF CHARGES

Effective from 1st April 2027

Version 1.1

The form of this statement was approved by the Gas and Electricity Markets Authority on 24 March 2026.

Scottish and Southern Electricity Networks is a trading name of: Scottish and Southern Energy Power Distribution Limited Registered in Scotland No. SC213459; Scottish Hydro Electric Transmission plc Registered in Scotland No. SC213461; Scottish Hydro Electric Power Distribution plc Registered in Scotland No SC213460 (all having their Registered Offices at Inveralmond House 200 Dunkeld Road Perth PH1 3AQ); and Southern Electric Power Distribution plc Registered in England & Wales No. 04094290 having its Registered Office at No. 1 Forbury Place, 43 Forbury Road, Reading, Berks, RG1 3JH. www.ssen.co.uk

Version Control

Version	Date	Description of version and any changes made
V 1.0	31/01/2026	SEPD DUoS Charges Final April 2027 (LC14 format)
V 1.1	October 2026	Annex 6 – Addition of new or amended charges and/or LLFs

A change-marked version of this statement can be provided upon request.

Contents

1. . Introduction 5

Validity period 5
Contact details 6

2. . Charge Application and Definitions 7

Supercustomer/Aggregated Billing and Payment 7
Supercustomer/Aggregated Charges 8
Site-Specific Billing and Payment 8
Site-Specific Billed Charges 8
Components of Charges 9
Time Periods 9
Application of Capacity Charges 10
Chargeable Capacity 10
Exceeded Capacity 10
Demand Exceeded Capacity 10
Generation Exceeded Capacity 10
Standby Capacity for Additional Security on Site 11
Minimum Capacity Levels 11
Application of charges for reactive power 11
Demand Chargeable Reactive Power 11
Generation Chargeable Reactive Power 11
Allocation of Charges 12
Generation Charges for Pre-2005 designated EHV properties 13
Provision of billing data 13
Out of Area Use of System Charges 13
Licensed Distributor Network Operator charges 13
Licence exempt distribution networks 14
Full settlement metering 14
Difference metering 14
Shared Metering 14
Gross settlement 14

3. . Schedule of Charges for use of the Distribution System 16

4. . Schedule of Line Loss Factors 17

Role of Line Loss Factors in the Supply of Electricity 17
Calculation of Line Loss Factors 17
Publication of Line Loss Factor tables 17

5. . Notes for Designated EHV Properties 19

EDCM network group costs 19
Charges for New Designated EHV Properties 19
Charges for Amended Designated EHV Properties 19
Demand Side Management 19

6. . Electricity Distribution Rebates 20

7. . Accounting and Administration Services 21

8. . Charges for electrical plant provided ancillary to the grant of Use of System 22

9. . Schedule of fixed adders to recover Supplier of Last Resort and Eligible Bad Debt pass-through costs 23

Supplier of Last Resort 23
Eligible Bad Debt 23
Tables of Fixed Adders 23

10. Non-Final Demand Sites 24

11. Back-up Connections 25

Appendix 1 – Glossary 26

Appendix 2 - Guidance notes 34

Background 34
Meter point administration 34
Your charges 35
Reducing your charges 35
Reactive power and reactive power charges 35
Site-specific EDCM charges 36
Additional Notes 38

Appendix 3 – Non-Final Demand Site Certificate 39

Annex 1 - Schedule of Charges for use of the Distribution System by LV and HV Designated Properties, and Unmetered Supplies 40

Annex 2 - Schedule of Charges for use of the Distribution System by Designated EHV Properties (including LDNOs with Designated EHV Properties/end-users) 44

Annex 3 - Schedule of Charges for use of the Distribution System by Preserved/Additional LLF Classes 65

Annex 4 - Charges applied to LDNOs with HV/LV end-users 66

Annex 5 – Schedule of Line Loss Factors 82

LLF time periods: 82

Annex 6 – Charges for New or Amended Designated EHV Properties 84

Annex 7 – Final Supplier of last Resort and Eligible Bad Debt Pass-Through Costs 86

1. Introduction

1.1 This statement tells you about our charges and the reasons behind them. It has been prepared consistent with Standard Licence Condition 14 of our Electricity Distribution Licence. The main purpose of this statement is to provide our schedule of charges[1] for the use of our Distribution System and to provide the schedule of Line Loss Factors[2] that should be applied in Settlement to account for losses from the Distribution System. We have also included guidance notes in Appendix 2 to help improve your understanding of the charges we apply.

1.2 Within this statement we use terms such as 'Users' and 'Customers' as well as other terms which are identified with initial capitalisation. These terms are defined in the Glossary.

1.3 This statement reflects the changes which have been introduced as a result of Market Wide Half Hourly Settlement (MHHS) [3]. Although the existing arrangements will continue to apply for Non-Migrated MPANs, the MHHS arrangements will be effective for any MPAN that has Migrated, any differences in treatment are highlighted throughout the document.

1.4 The charges in this statement are calculated using the following methodologies as per the Distribution Connection and Use of System Agreement (DCUSA)[4] :

- Common Distribution Charging Methodology (CDCM); for Low Voltage (LV) and High Voltage (HV) Designated Properties as per DCUSA Schedule 16; and
- Extra-High Voltage (EHV) Distribution Charging Methodology (EDCM); for Designated EHV Properties as per DCUSA Schedule 17.
- Price Control Disaggregation Model (PCDM); for Discount Percentages used to calculate the LDNO Use of System charges in the CDCM and EDCM as per DCUSA Schedule 29.

1.5 Separate charges are calculated depending on the characteristics of the connection and whether the use of the Distribution System is for demand or generation purposes. Where a generation connection is seen to support the Distribution System the charges will be negative and the Supplier will receive credits for exported energy.

1.6 The application of charges to premises can usually be referenced using the Line Loss Factor Class (LLFC)/DUoS Tariff ID contained in the charge tables. Further information on how to identify and calculate the charge that will apply for your premises is provided in the guidance notes in Appendix 2.

1.7 All charges in this statement are shown **exclusive** of VAT. Invoices will include VAT at the applicable rate.

1.8 The annexes that form part of this statement are also available in spreadsheet format. This spreadsheet contains supplementary information used for charging purposes and a simple model to assist you to calculate charges. This spreadsheet can be downloaded from our website www.ssen.co.uk.

Validity period

1.9 This charging statement is valid for services provided from the effective date stated on the front of the statement and remains valid until updated by a revised version or superseded by a statement with a later effective date.

1.10 When using this charging statement care should be taken to ensure that the relevant statement or statements covering the period that is of interest are used.

[1] Charges can be positive or negative.
[2] Known as adjustment factors in the Distribution Licence and commonly referred to as Loss Adjustment Factors. The schedule of Line Loss Factors will be provided in a revised statement shortly after the Line Loss Factors for the relevant year have been successfully audited by Elexon.
[3] Information relating to the Market wide HH Settlement Programme available from Home - MHHS Programme
[4] The Distribution and Connection Use of System Agreement (DCUSA) available from DCUSA Document - DCUSA

1.11 Notice of any revision to the statement will be provided to Users of our Distribution System (with the exception of updates to Annex 6; New or Amended EHV Sites which will be published as an addendum). The latest statements can be downloaded from www.ssen.co.uk.

Contact details

1.12 If you have any questions about this statement please contact us at the address shown below:

Distribution Pricing Team
Southern Electric Power Distribution plc
Inveralmond House
200 Dunkeld Road
Perth
PH1 3AQ
Email: DistributionPricingTeam@sse.com

1.13 All enquiries regarding Connection Agreements, changes to Maximum Capacities, and certification of Non-Final Demand sites should be addressed to:

Email: authorised.capacity@sse.com

Post:
Authorised Capacity
Scottish and Southern Electricity Networks
Daneshill Depot
Faraday Road
Basingstoke
RG24 8QQ

1.14 For all other queries please contact our general enquiries telephone number: 0800 048 3516.

2. Charge Application and Definitions

2.1 The following section details how the charges in this statement are applied and billed to Users of our Distribution System.

The Supercustomer/Aggregated and site-specific billing approaches

2.2 We utilise two billing approaches depending on the type of metering data received:

(a) The 'Supercustomer/Aggregated' approach for Customers for whom we receive aggregated consumption data through Settlement; and

(b) The 'Site-specific' approach for Customers for whom we receive site-specific consumption data through Settlement.

2.3 We receive aggregated consumption data through Settlement for:

Non-Migrated MPANS:

- Domestic and non-domestic Customers for whom Non-Half Hourly (NHH) metering data is used in Settlement (i.e. Customers with MPANs which are registered to Measurement Class A);
- Customers which are unmetered and are not settled as pseudo Half Hourly (HH) metered (i.e. Customers with MPANs which are registered to Measurement Class B);
- Domestic Customers for whom HH metering data is used in Settlement (i.e. Customers with MPANs which are registered to Measurement Class F); and
- Non-domestic Customers for whom HH metering data is used in Settlement and which have whole current (WC) metering (i.e. Customers with MPANs which are registered to Measurement Class G).

Migrated MPANs:

- All Customers who have a Connection Type that indicates a Whole Current connection, i.e. with Connection Type 'W'.

2.4 We receive site specific consumption data through Settlement for:

Non-Migrated MPANs:

- Customers for whom HH metering data is used in Settlement and which have current transformer (CT) metering (i.e. Customers with MPANs which are registered to measurement class C or E); and
- Customers which are unmetered and settled as pseudo HH metered (i.e. Customers with MPANs which are registered to measurement class D).

Migrated MPANs:

- All Customers who have a Connection Type of 'L' Low Voltage, 'H' High Voltage, 'E' Extra-High Voltage or 'U' Unmetered.

Supercustomer/Aggregated Billing and Payment

2.5 The Supercustomer/Aggregated approach makes use of aggregated data obtained from Suppliers using the 'Aggregated Distribution Use of System (DUoS) Report' data flow for Non-Migrated MPANs, and the 'LDSO report for DUoS – aggregated data' message or the 'Embedded Network report for DUoS – aggregated data' message for Migrated MPANs.

2.6 Invoices are calculated on a periodic basis and sent to each User for whom we transport electricity through our Distribution System. Invoices are reconciled, over a period of approximately 14 months to reflect later and more accurate consumption figures, this will reduce to 4 months following MHHS implementation.

2.7 The charges are applied on the basis of the LLFC/DUoS Tariff ID assigned to the MPAN, and the units consumed within the time periods specified in Annex 1. All LLFCs/DUoS Tariff ID are assigned at our sole discretion, based on the tariff application rules set out in the appropriate

charging methodology or elsewhere in this statement. Please refer to the section 'Allocation of Charges' if you believe the allocated LLFC/DUoS Tariff ID or tariff is incorrect.

Supercustomer/Aggregated Charges

2.8 Supercustomer/Aggregated charges are generally billed through the following components:

- a fixed charge, pence/MPAN/day; there will only be one fixed charge applied to each MPAN; and
- unit charges, pence/kilowatt-hour (kWh); three unit charges will apply depending on the time of day and the type of tariff for which the MPAN is registered.

2.9 Users who wish to supply electricity for whom we receive aggregated data through Settlement (see paragraph 2.3) will be allocated the relevant charge structure set out in Annex 1.

2.10 Identification of the appropriate charge can be made by cross reference to the LLFC/DUoS Tariff ID.

2.11 For Non-Migrated MPANs the Valid Settlement Profile Class (PC) /Standard Settlement Class (SSC)/ Meter Timeswitch Code (MTC) combinations for LLFC where the Metering System is Measurement Class A or B are detailed in Market Domain Data (MDD). For Migrated MPANs the appropriate reference data is contained in Industry Standing Data (ISD).

2.12 Where an MPAN has an invalid Settlement Combination, the 'Domestic Aggregated with Residual' fixed and unit charges will be applied as default until the invalid combination is corrected. Where there are multiple SSC/TPR combinations for Non-Migrated MPANs, the default 'Domestic Aggregated with Residual' fixed and unit charges will be applied for each invalid SSC/TPR combination.

2.13 The 'Domestic Aggregated (related MPAN)' and 'Non-Domestic Aggregated (related MPAN)' charges are supplementary to their respective primary MPAN charge.

Site-Specific Billing and Payment

2.14 The site-specific billing and payment approach makes use of HH metering data at premises level received through Settlement.

2.15 Invoices are calculated on a periodic basis and sent to each User for whom we transport electricity through our Distribution System. Where an account is based on estimated data, the account shall be subject to any adjustment that may be necessary following the receipt of actual data from the User.

2.16 The charges are applied on the basis of the LLFC/DuoS Tariff ID assigned to the MPAN or MSID for Central Volume Allocation (CVA) sites, and the units consumed within the time periods specified in this statement.

2.17 All LLFCs/DUoS Tariff IDs are assigned at our sole discretion, based on the tariff application rules set out in the appropriate charging methodology or elsewhere in this statement. Please refer to the section 'Allocation of Charges' if you believe the allocated LLFC/DUoS Tariff ID or tariff is incorrect.

Site-Specific Billed Charges

2.18 Site-specific billed charges for LV and HV Designated Properties may include the following components:

- a fixed charge in pence/MPAN/day for SVA sites, or pence/MSID/day for CVA sites;
- a capacity charge in pence/kilovolt-ampere (kVA)/day, for Maximum Import Capacity (MIC) and/or Maximum Export Capacity (MEC);
- an exceeded capacity charge in pence/kVA/day, if a site exceeds its MIC and/or MEC;
- three unit charges in pence/kWh, depending on the time of day and the type of tariff for which the MPAN is registered; and
- a reactive power charge in pence/kilovolt-ampere reactive hour (kVArh), for each unit in excess of the reactive charge threshold.

2.19 Site-specific billed charges for properties that are under transitional protection arrangements for BSC Modification P432 or MHHS will include only fixed and unit charges, in the same manner as Supercustomer/Aggregate charges, as described in 2.8.

2.20 Users who wish to supply electricity to Customers for whom we receive site-specific data through Settlement (see paragraph 2.4) will be allocated the relevant charge structure dependent upon the voltage and location of the Metering Point.

2.21 Fixed charges are generally levied on a pence per MPAN/MSID per day basis.

2.22 LV and HV Designated Properties will be charged in accordance with the CDCM and allocated the relevant charge structure set out in Annex 1.

2.23 Designated EHV Properties will be charged in accordance with the EDCM and allocated the relevant charge structure set out in Annex 2.

2.24 Where LV and HV Designated Properties or Designated EHV Properties have more than one point of connection (as identified in the Connection Agreement) then separate charges will be applied to each point of connection.

Components of Charges

Application of Residual Charges

2.25 The following sections explain the application of residual charges.

Final Demand Sites

2.26 Residual charges are recovered through fixed charges for all Final Demand Sites. All Non-Final Demand Sites must submit a valid certificate, as described in Section 10, and upon receipt of a valid certificate will be allocated to the relevant No Residual Tariff.

2.27 All Back-up Connections must provide clear supporting documentary evidence to the reasonable satisfaction of the LDNO, as described in Section 11, and upon receipt of sufficient evidence will be allocated to the relevant No Residual tariff.

Residual Charging Bands

2.28 Residual charges are applied to Final Demand Sites on a banded basis, with all sites in a given charge band receiving the same residual charge. Domestic customers have a single charging band.

2.29 There are four non-domestic charging bands for each of the following groups:

- Designated Properties connected at LV, billing with no MIC;
- Designated Properties connected at LV, billing with MIC;
- Designated Properties connected at HV; and
- Designated EHV Properties.

2.30 All non-domestic Final Demand customers are allocated into one of the four charging bands, for each relevant charge structure.

2.31 The residual charging band boundaries are calculated nationally based upon data from all LDNOs. The method and timing for calculating the residual charging band boundaries and the method and timing for allocating customers into the residual charging bands are set out in Schedule 32 of DCUSA.

2.32 The boundaries for the residual bands can be found in the 'Schedule of Charges and Other Tables' spreadsheet on our website, as well as the mapping between the DUoS Tariff name and TNUOS site charging band.

Time Periods

2.33 The time periods for the application of unit charges to LV and HV Designated Properties are detailed in Annex 1. We have not issued a notice to change the time bands.

2.34 The time periods for the application of unit charges to Unmetered Supply Exit Points are detailed in Annex 1. We have not issued a notice to change the time bands

2.35 The time periods for the application of unit charges to Designated EHV Properties are detailed in Annex 2. We have not issued a notice to change the time bands.

Application of Capacity Charges

2.36 The following sections explain the application of capacity charges and exceeded capacity charges.

Chargeable Capacity

2.37 The chargeable capacity is, for each billing period, the MIC/MEC as detailed below.

2.38 The MIC/MEC will be agreed with us at the time of connection or pursuant to a later change in requirements. Following such an agreement (be it at the time of connection or later) no reduction in MIC/MEC will be allowed for a 12 month period.

2.39 Reductions to the MIC/MEC may only be permitted once in a 12 month period. Where the MIC/MEC is reduced the new lower level will be agreed with reference to the level of the Customer's maximum import and/or export demand respectively. The new MIC/MEC will be applied from the start of the next billing period after the date that the request was received. It should be noted that, where a new lower level is agreed, the original capacity may not be available in the future without the need for network reinforcement and associated charges.

2.40 In the absence of an agreement, the chargeable capacity, save for error or omission, will be based on the last MIC/MEC previously agreed by us for the relevant premises' connection. A Customer can seek to agree or vary the MIC/MEC by contacting us using the contact details in section 1.11.

Exceeded Capacity

2.41 Where a Customer takes additional unauthorised capacity over and above the MIC/MEC, the excess will be classed as exceeded capacity. The exceeded portion of the capacity will be charged at the exceeded capacity charge p/kVA/day rate, based on the difference between the MIC/MEC and the actual capacity used. This will be charged for the duration of the full month in which the breach occurs.

Demand Exceeded Capacity

$$\text{Demand Exceeded Capacity} = \max(2 \times \sqrt{AI^2 + \max(RI, RE)^2} - MIC, 0)$$

Where:
AI = Active Import (kWh)
RI = Reactive Import (kVArh)
RE = Reactive Export (kVArh)
MIC = Maximum Import Capacity (kVA)

2.42 Only reactive import and reactive export values occurring at times of active import are used in the calculation. Where data for two or more MPANs is aggregated for billing purposes the HH consumption values are summated prior to the calculation above.

2.43 This calculation is completed for every half hour and the maximum value from the billing period is applied.

Generation Exceeded Capacity

$$\text{Generation Exceeded Capacity} = \max(2 \times \sqrt{AE^2 + \max(RI, RE)^2} - MEC, 0)$$

Where:
AE = Active Export (kWh)
RI = Reactive Import (kVArh)
RE = Reactive Export (kVArh)
MEC = Maximum Export Capacity (kVA)

2.44 Only reactive import and reactive export values occurring at times of active export are used in the calculation. Where data for two or more MPANs is aggregated for billing purposes the HH consumption values occurring at times of kWh export are summated prior to the calculation above.

2.45 This calculation is completed for every half hour and the maximum value from the billing period is applied.

Standby Capacity for Additional Security on Site

2.46 Where standby capacity charges are applied, the charge will be set at the same rate as that applied to the normal MIC. Should a Customer's request for additional security of supply require the provision of capacity from two different sources, we reserve the right to charge for the capacity held at each source.

Minimum Capacity Levels

2.47 There is no minimum capacity threshold.

Application of charges for reactive power

2.48 When an individual HH metered MPAN's reactive power (measured in kVArh) at LV and HV Designated Properties exceeds 33% of its total active power (measured in kWh), reactive power charges will apply. This threshold is equivalent to an average power factor of 0.95 during the period. Any reactive units in excess of the 33% threshold are charged at the rate appropriate to the particular charge.

2.49 Power Factor is calculated as follows:

Cos θ = Power Factor

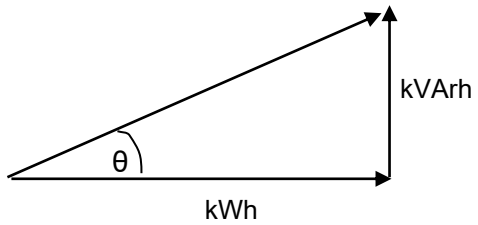

2.50 The chargeable reactive power is calculated as follows:

Demand Chargeable Reactive Power

$$\text{Demand Chargeable kVArh} = \max\left(\max(\text{RI},\text{RE}) - \left(\sqrt{\left(\frac{1}{0.95^2} - 1\right)} \times \text{AI}\right), 0\right)$$

Where:
AI = Active Import (kWh)
RI = Reactive Import (kVArh)
RE = Reactive Export (kVArh)

2.51 Only reactive import and reactive export values occurring at times of active import are used in the calculation. Where data for two or more MPANs is aggregated for billing purposes the HH consumption values are summated prior to the calculation above.

2.52 The square root calculation will be to two decimal places.

2.53 This calculation is completed for every half hour and the values summated over the billing period.

Generation Chargeable Reactive Power

$$\text{Generation Chargeable kVArh} = \max\left(\max(\text{RI},\text{RE}) - \left(\sqrt{\left(\frac{1}{0.95^2} - 1\right)} \times \text{AE}\right), 0\right)$$

Where:
AE = Active Export (kWh)
RI = Reactive Import (kVArh)
RE = Reactive Export (kVArh)

2.54 Only reactive import and reactive export values occurring at times of active export are used in the calculation. Where data for two or more MPANs is aggregated for billing purposes the HH consumption values are summated prior to the calculation above.

2.55 The square root calculation will be to two decimal places.

2.56 This calculation is completed for every half hour and the values summated over the billing period.

Allocation of Charges

2.57 It is our responsibility to apply the correct charges to each MPAN/MSID. The allocation of charges is based on the voltage of connection, import/export details including multiple MPANs, metering information and, for some tariffs, the metering location.

2.58 We are responsible for deciding the voltage of connection. Generally, this is determined by where the metering is located and where responsibility for the electrical equipment transfers from us to the connected Customer.

2.59 We are also responsible for allocating non-domestic customers into their residual charging bands. Allocation into residual charging bands is determined by consumption for customers billed under the Supercustomer/Aggregated approach and for properties that are under transitional protection arrangements for BSC Modification P432 or MHHS, and by the MIC for all other customers billed under the site-specific approach.

2.60 The Supplier determines and provides us with the metering information and data. This enables us to allocate charges where there is more than one charge per voltage level. The metering information and data is likely to change over time if, for example, a Supplier changes from a two rate meter to a single rate meter. When we are notified this has happened we will change the allocation of charges accordingly.

2.61 If it has been identified that a charge has been incorrectly allocated due to the metering information and/or data then a correction request should be made to the Supplier.

2.62 Where it has been identified that:

(a) a charge is likely to be incorrectly allocated due to the voltage of connection, import/export details or metering location, or allocation to residual charging band; or

(b) a connection may be eligible for Low Voltage Substation tariff(s);

a request to investigate the applicable charges should be made to us. Requests from persons other than the Customer or the current Supplier must be accompanied by a Letter of Authority from the Customer and the current Supplier must also acknowledge that they are aware a request has been made. Any request must be supported by an explanation of why it is believed that the current charge should be changed, along with supporting information including, where appropriate, photographs of metering positions or system diagrams. Any request to change the current charge that also includes a request for backdating must include justification as to why it is considered appropriate to backdate the change.

2.63 Where a residual charging band allocation cannot be resolved, the process provided within DCUSA Schedule 32 should be followed.

2.64 An administration charge (covering our reasonable costs) may be made if a technical assessment or site visit is required, but we will not apply any charge where we agree to the change request.

2.65 Where we agree that the current LLFC/DUoS Tariff ID charge should be changed, we will then allocate the appropriate set of charges for the connection. Any adjustment will be applied from the date of the request back to either:

(a) the date of incorrect allocation in respect of paragraphs 2.61 or 2.62(a); or

(b) up to the maximum period specified by the Limitation Act (1980) in England and Wales, which covers a six year period;

whichever is the shorter.

2.66 Any credit or additional charge will be issued to the relevant Supplier(s) effective during the period of the change.

2.67 Should we reject the request (as per paragraph 2.62) a justification will be provided to the requesting Party. We shall not unreasonably withhold or delay any decision on a request to change the charges applied and would expect to confirm our position on the request within three months of the date of request.

Generation Charges for Pre-2005 designated EHV properties

2.68 Designated EHV Properties that were connected to the Distribution System under a pre-2005 connection charging policy are eligible for exemption from DUoS charges for generation unless one of the following criteria has been met:

- 25 years have passed since their first energisation/connection date, i.e. Designated EHV Properties with Connection Agreements dated prior to 1st April 2005, and for which 25 years has passed since their first energisation/connection date will receive use of system charges for generation from the next charging year following the expiry of their 25 years exemption starting 1st April, or
- the person responsible for the Designated EHV Property has provided notice to us that they wish to opt in to DUoS charges for generation.

If a notice to opt in has been provided there will be no further opportunity to opt out.

2.69 Furthermore, if an exempt Customer makes an alteration to its export requirement then the Customer may be liable to be charged for the additional capacity required for energy imported or exported. For example, where a generator increases its export capacity the incremental increase in export capacity will attract DUoS charges as with other non-exempt generators.

Provision of billing data

2.70 Where HH metering data is required for DUoS charging and this is not provided in accordance with the BSC or DCUSA, such metering data shall be provided by the User of the system to us in respect of each calendar month within five working days of the end of that calendar month.

2.71 The metering data shall identify the amount of energy conveyed across the Metering System in each half hour of each day and shall separately identify active and reactive import and export. Metering data provided to us shall be consistent with that received through the metering equipment installed.

2.72 Metering data shall be provided in an electronic format specified by us from time to time and in the absence of such specification, metering data shall be provided in a comma-separated text file in the format of data flow D0275[5] for Non-Migrated MPANs, and the IF-21 message for Migrated MPANs (as agreed with us). The data shall be e-mailed to duos.income.billing@sse.com.

2.73 We require details of reactive power imported or exported to be provided for all Measurement Class C and E sites for Non-Migrated MPANs, and for all Migrated MPANs with a connection type of 'L', 'H', or 'E'. It is also required for CVA sites and Exempt Distribution Network boundaries with difference metering. We reserve the right to levy a charge on Users who fail to provide such reactive data. In order to estimate missing reactive data, a power factor of 0.95 lag will be applied to the active consumption in any half hour.

Out of Area Use of System Charges

2.74 We operate embedded distribution networks in all other DNO areas in England & Wales. The charges for these 'out of area' networks are provided in a separate charging statement. This statement is available from our website www.ssen.co.uk.

Licensed Distributor Network Operator charges

2.75 Licensed Distribution Network Operator (LDNO) charges are applied to LDNOs who operate Embedded Networks within our Distribution Services Area.

2.76 The charge structure for LV and HV Designated Properties embedded in networks operated by LDNOs will mirror the structure of the 'All-the-way' charge and is dependent upon the voltage of

[5] Data Transfer Catalogue available from https://www.electralink.co.uk/dtc-catalogue

connection of each Embedded Network to the Host DNO's network. The relevant charge structures are set out in Annex 4.

2.77 Where a NHH metered MPAN has an invalid Settlement combination, the 'LDNO HV: Domestic Aggregated with Residual' fixed and unit charges will be applied as default until the invalid combination is corrected. Where there are multiple SSC/TPR combinations for Non-Migrated MPANs, the default 'LDNO HV: Domestic Aggregated with Residual' fixed and unit charges will be applied for each invalid TPR combination.

2.78 The charge structure for Designated EHV Properties embedded in networks operated by LDNOs will be calculated individually using the EDCM. The relevant charge structures are set out in Annex 2.

2.79 For Nested Networks the relevant charging principles set out in DCUSA Schedule 21 will apply.

Licence exempt distribution networks

2.80 The Electricity and Gas (Internal Market) Regulations 2011[6] introduced obligations on owners of licence exempt distribution networks (sometimes called private networks) including a duty to facilitate access to electricity and gas Suppliers for Customers within those networks.

2.81 When Customers (both domestic and commercial) are located within a licence exempt distribution network and require the ability to choose their own Supplier this is called 'third party access'. These embedded Customers will require an MPAN so that they can have their electricity supplied by a Supplier of their choice.

2.82 Licence exempt distribution networks owners can provide third party access using either full settlement metering or the difference metering approach. [7]

Full settlement metering

2.83 This is where a licence exempt distribution network is set up so that each embedded installation has an MPAN and Metering System and therefore all Customers purchase electricity from their chosen Supplier. In this case there are no Settlement Metering Systems at the boundary between the licensed Distribution System and the licence exempt distribution network.

2.84 In this approach our DUoS charges may be applied to each MPAN.

Difference metering

2.85 This is where one or more, but not all, Customers on a licence exempt distribution network choose their own Supplier for electricity supply to their premises. Under this approach the Customers requiring third party access on the licence exempt distribution network will have their own MPAN and must have a HH Metering System.

Shared Metering

2.86 This is where one or more Customers on a license exempt distribution network choose their own Supplier for electricity supply to their premises, and the active import and/or active export meter readings at the boundary are apportioned between the Suppliers. Under this approach, the Customers requiring third party access on the license exempt distribution network will have their own MPAN and must have a HH Metering System.

2.87 In this approach our DUoS charges may be applied to each MPAN.

Gross settlement

2.88 Where one of our MPANs (prefixed by the number 20) is embedded within a licence exempt distribution network connected to our Distribution System, and difference metering is in place for Settlement purposes and we receive gross measurement data for the boundary MPAN, we will continue to charge the boundary MPAN Supplier for use of our Distribution System. No charges

[6] The Electricity and Gas (Internal Market) Regulations 2011 available from http://www.legislation.gov.uk/uksi/2011/2704/contents/made

[7] Elexon's guide is available from https://www.elexon.co.uk/guidance-note/third-party-access-licence-exempt-distribution-networks/

will be levied by us directly to the Customer or Supplier of the embedded MPAN(s) connected within the licence exempt distribution network.

2.89 We require that gross metered data for the boundary of the connection is provided to us. Until a new industry data flow is introduced for the sending of such gross data, gross metered data shall:

- be provided in a text file in the format of the D0036 or D0275 data flow;
- the text file shall be emailed to duos.income.billing@sse.com;
- the title of the email should also contain the phrase "gross data for difference metered private network" and contain the metering reference specified by us in place of the Settlement MPAN; and
- the text filename shall be formed of the metering reference specified by us followed by a hyphen and followed by a timestamp in the format YYYYMMDDHHMMSS and followed by ".txt".

2.90 For the avoidance of doubt, the reduced difference metered measurement data for the boundary connection that is to enter Settlement should continue to be sent using the Settlement MPAN.

3. Schedule of Charges for use of the Distribution System

3.1 Tables listing the charges for use of our Distribution System are published in annexes to this document.

3.2 These charges are also listed in a spreadsheet which is published with this statement and can be downloaded from our website www.ssen.co.uk.

3.3 Annex 1 contains the charges applied to LV and HV Designated Properties.

3.4 Annex 2 contains the charges applied to Designated EHV Properties and charges applied to LDNOs for Designated EHV Properties connected to their Distribution Systems.

3.5 Annex 3 contains details of any preserved and additional charges that are valid at this time. Preserved charges are mapped to an appropriate charge and are closed to new Customers.

3.6 Annex 4 contains the charges applied to LDNOs in respect of LV and HV Designated Properties connected to their Distribution Systems.

4. Schedule of Line Loss Factors

Role of Line Loss Factors in the Supply of Electricity

4.1 Electricity entering or exiting our Distribution System is adjusted to take account of energy that is lost[8] as it is distributed through the network. This adjustment does not affect distribution charges but is used in energy settlement to take metered consumption to a notional Grid Supply Point so that Suppliers' purchases take account of the energy lost on the Distribution System.

4.2 We are responsible for calculating the Line Loss Factors (LLFs) and providing these to Elexon. Elexon is the company that manages the BSC.

4.3 LLFs are used to adjust the Metering System volumes to take account of losses on the Distribution System.

Calculation of Line Loss Factors

4.4 LLFs are calculated in accordance with BSCP128 which sets out the procedures and principles with which our LLF methodology must comply. It also defines the procedure and timetable by which LLFs are reviewed and submitted.

4.5 LLFs are calculated for a set number of time periods during the year, using either a generic or a site specific method. The generic method is used for sites connected at LV or HV and the site specific method is used for sites connected at EHV or where a request for site specific LLFs has been agreed. Generic LLFs will be applied as a default to all new EHV sites until sufficient data is available for a site specific calculation.

Where the usage profile for a given site contains insufficiently large consumption or generation volumes to enable calculation of realistic Site Specific LLFs then a default calculation, or default replacement process shall be undertaken.

A default replacement process shall be deemed to have been undertaken if a generic methodology is used where the following applies:

(a) A Site has multiple connections to the Total System and the primary connection is at EHV but there is a subordinate connection that is not connected at EHV, then a generic methodology MAY be used for the subordinate connection (even if a Site specific LLF is used for the Site's primary connection); and

(b) The connection has a capacity of less than or equal to 1MVA

The definition of EHV used for LLF purposes differs from the definition used for defining Designated EHV Properties in the EDCM. The definition used for LLF purposes can be found in our LLF methodology, which can be found on the Elexon website[9].

Publication of Line Loss Factor tables

4.6 The LLFs used in Settlement are published on the Elexon Portal[10] . The website contains the LLFs in standard industry data formats and in a summary form. A user guide with details on registering and using the portal is also available.

4.7 BSCP 128 sets out the timetable by which LLFs are submitted and audited. The submission and audit occurs between September and December in the year prior to the LLFs becoming effective. Only after the completion of the audit at the end of December and BSC approval are the final LLFs published.

[8] Energy can be lost for technical and non-technical reasons and losses normally occur by heat dissipation through power flowing in conductors and transformers. Losses can also reduce if a Customer's action reduces power flowing in the distribution network. This might happen when a Customer generates electricity and the produced energy is consumed locally.

[9] The following page has links to BSCP128 and to our LLF methodology: http://www.elexon.co.uk/reference/technical-operations/losses/

[10] The Elexon Portal can be accessed from www.elexonportal.co.uk

4.8 At the time that this charging statement is first published, Annex 5 will be intentionally left blank, as this statement is published a complete year before the LLFs have been calculated and audited. Once the final BSCP128 Audit Report has been received, we will issue an updated version of Annex 5 containing the audited LLF values.

4.9 When using the tables in Annex 5, reference should be made to the LLFC allocated to a Non-Migrated MPAN or to the DUoS Tariff ID allocated to a Migrated MPAN to find the appropriate values.

5. Notes for Designated EHV Properties

EDCM network group costs

5.1 A table is provided in the accompanying spreadsheet which shows the underlying Forward Cost Pricing (FCP) network group costs used to calculate the current EDCM charges. This spreadsheet (SEPD – Schedule of charges and other tables.xlsx) is available to download from our website www.ssen.co.uk.

5.2 These are illustrative of the modelled costs at the time that this statement was published. A new connection will result in changes to current network utilisations which will then form the basis of future prices. The charge determined in this statement will not necessarily be the charge in subsequent years because of the interaction between new and existing network connections and any other changes made to our Distribution System which may affect charges.

Charges for New Designated EHV Properties

5.3 Charges for any new Designated EHV Properties calculated after publication of the current statement will be published on our website in an addendum to that statement as and when necessary. The addendum will include charge information of the type found in Annex 2, and LLFs as found in Annex 5.

5.4 The form of the addendum is detailed in Annex 6 of this statement.

5.5 The new Designated EHV Properties' charges will be added to Annex 2 in the next full statement released.

Charges for Amended Designated EHV Properties

5.6 Where an existing Designated EHV Property connection is modified and energised in the charging year, we may revise our EDCM charges for the modified Designated EHV Property. If revised charges are appropriate, an addendum will be sent to all relevant parties and published as a revised 'Schedule of Charges and Other Tables' spreadsheet on our website www.ssen.co.uk. The modified Designated EHV Property charges will be added to Annex 2 in the next full statement released.

Demand Side Management

5.7 New or existing Designated EHV Property Customers may wish to offer part of their MIC to be interruptible by us (for active network management purposes other than normal planned or unplanned outages) in order to benefit from any reduced DUoS charges calculated using the EDCM.

5.8 Several options exist in which we may agree for some or the entire MIC to be interruptible. Under the EDCM the applicable demand capacity costs would be based on the MIC minus the capacity subject to interruption.

5.9 If you are interested in making part or all of your MIC interruptible as an integral irrevocable feature of a new connection or modification to an existing connection you should in the first instance contact our connections function;

connections@ssen.co.uk

You must make an express statement in your application that you have an interest in some or all of the import capacity being interruptible for active network management purposes.

5.10 If you are proactively interested in voluntarily but revocably offering to make some or all of your existing connection's MIC interruptible you should in the first instance contact us at the address in paragraph 5.9.

6. Electricity Distribution Rebates

6.1 We have neither given nor announced any DUoS rebates to Users in the 12 months preceding the date of publication of this version of the statement.

7. Accounting and Administration Services

7.1 Other than the charges noted below, no Accounting and Administration charges are detailed within this statement. Please refer to our Statement of Miscellaneous Charges for details of our transactional charges and other notices.

7.2 We reserve the right to impose payment default remedies. The remedies are as set out in the DCUSA where applicable or else as detailed in the following paragraph.

7.3 If any invoices that are not subject to a valid dispute remain unpaid on the due date, late payment interest (calculated at Base Rate plus 8%) and administration charges may be imposed.

7.4 Our administration charges are detailed in the following table. These charges are set at a level which is in line with the Late Payment of Commercial Debts Act;

Size of Unpaid Debt	**Late Payment Fee**
Up to £999.99	£40.00
£1,000 to £9,999.99	£70.00
£10,000 or more	£100.00

8. Charges for electrical plant provided ancillary to the grant of Use of System

8.1 No charges for electrical plant provided ancillary to the grant of Use of System are detailed within this statement. Please refer to our Statement of Miscellaneous Charges for details of transactional charges and other notices.

9. Schedule of fixed adders to recover Supplier of Last Resort and Eligible Bad Debt pass-through costs

Supplier of Last Resort

9.1 In accordance with Standard Condition 38B 'Last Resort Supply Payment Claims' ('SLC38B') and Special Condition 6 'Pass-through expenditure' ('SpC6') of our Electricity Distribution Licence, our charges will recover the amount of payments in Regulatory Year t made in response to Last Resort Supply Payment claims.

Eligible Bad Debt

9.2 In accordance with SpC6, our charges will recover the amount of use of system bad debt the Authority has consented to be recovered. This represents use of system bad debt our charges are recovering on behalf of Independent Distribution Network Operators (IDNOs), in accordance with Standard Licence Condition 38C 'Treatment of Valid Bad Debt Claims' ('SLC38C'), and specifically paragraph 4 of that condition.

Tables of Fixed Adders

9.3 Tables listing the charges to recover Supplier of Last Resort and Eligible Bad Debt pass-through costs are published in Annex 7 to this document. The charges are shown for information only and are already included in the final Annex 1 charges.

10. Non-Final Demand Sites

Charges for Non-Final Demand Sites

10.1. A Non-Final Demand Site is charged an import tariff that excludes the residual cost element of charges. If the User wishes for a property to qualify for allocation to these tariffs, then the User must submit certification declaring that the property meets the required criteria as per DCUSA.

Process for submitting certification

10.2. This certification should take the form as set out in Appendix 3 and be submitted to Authorised Capacity using the contact details in 1.13.

We may, at our discretion, request a signed paper certificate from the User, in place of electronic. If requested, paper certification should be posted to the contact details in 1.13.

10.3. Users should undertake reasonable endeavours to ensure the facts attested to in the certification are true. We may request documentation evidencing these endeavours, including where appropriate, photographs of metering positions or system diagrams, following receipt of the certification.

10.4. If we determine that the documentation provided does not sufficiently evidence the undertaking of reasonable endeavours, does not support the facts attested to in the certification, or if no documentation is received, we may at our discretion reject the certification as invalid. If the certification is rejected as invalid, then the property will not qualify as a Non-Final Demand Site.

Application of charges for Non-Final Demand Sites

10.5. A property will only be deemed to qualify as a Non-Final Demand Site, and be allocated charges as such, from the date on which we receive valid certification.

10.6. If a property that has previously been certified as a Non-Final Demand Site no longer satisfies the criteria as per DCUSA, then the User must inform us immediately.

10.7. For a property that has been previously certified as a Non-Final Demand Site, we will continue to apply the relevant no residual import tariff without the requirement for further certification, except in any one of the following circumstances:

(a) Where we have reason to believe that the property no longer qualifies as a Non-Final Demand Site; or,

(b) Significant time has passed since the certification was submitted; or,

(c) Where there is a change to the connection characteristics i.e. capacity change.

If such circumstances occur, we may request re-certification of the site, or reject the certification as invalid at our discretion.

10.8. When a property no longer meets the required criteria to qualify as a Non-Final Demand Site, we will change the allocation of charges accordingly from that point.

10.9. Please refer to the section 'Allocation of Charges' if you believe the property has been incorrectly not allocated charges as a Non-Final Demand Site.

11. Back-up Connections

Charges for Back-up Connections

11.1. A Back-up Connection is charged an import tariff that excludes the residual cost element of charges. If the User wishes for a MPAN/MSID to qualify for allocation to these tariffs, then the User must provide evidence necessary to satisfy the definition of Back-up Connection as per DCUSA.

Process for providing evidence

11.2. Users should undertake reasonable endeavours to ensure the facts attested to in the request are true. We may request documentation evidencing these endeavours, including where appropriate, photographs of metering positions or system diagrams.

11.3. If we determine that the documentation provided does not sufficiently evidence the undertaking of reasonable endeavours, does not support the facts attested to in the request, or if no documentation is received, we may at our discretion reject the evidence as invalid. If the evidence is rejected as invalid, then the property will not qualify as a Back-up Connection.

Application of charges for Back-up Connections

11.4. A MPAN/MSID will only be deemed to qualify as a Back-up Connection, and be allocated charges as such, from the first of the month following the date on which we receive valid evidence.

11.5. If a MPAN/MSID that has previously been appointed as a Back-up Connection no longer satisfies the criteria as per DCUSA, then the User must inform us immediately.

11.6. For a MPAN/MSID that has been previously certified as a Back-up Connection, we will continue to apply the relevant no residual import tariff without the requirement for further certification, except in any one of the following circumstances:

(a) Where we have reason to believe that the MPAN/MSID no longer qualifies as a Back-up Connection; or

(b) Significant time has passed since the evidence was submitted; or

(c) Where there is a change to the connection characteristics i.e. capacity change.

If such circumstances occur, we may request evidence to be provided again for the site, or reject the evidence as invalid at our discretion.

11.7. When a MPAN/MSID no longer meets the required criteria to qualify as a Back-up Connection, we will change the allocation of charges accordingly from that point.

11.8. Please refer to the section 'Allocation of Charges' if you believe the MPAN/MSID has been incorrectly not allocated charges as a Back-up Connection.

Appendix 1 – Glossary

1.1. The following definitions, which can extend to grammatical variations and cognate expressions, are included to aid understanding:

Term	Definition
All-the-way Charge	A charge that is applicable to an end user rather than an LDNO. An end user in this context is a Supplier/User who has a registered MPAN or MSID and is using the Distribution System to transport energy on behalf of a Customer.
Back-up Connection	As defined in DCUSA Schedule 32.
Balancing and Settlement Code (BSC)	The BSC contains the governance arrangements for electricity balancing and settlement in Great Britain. An overview is available from https://www.elexon.co.uk/bsc-and-codes/balancing-settlement-code/
Balancing and Settlement Code Procedure (BSCP)	A document of that title, as established or adopted and from time to time modified by the Panel in accordance with The Code, setting out procedures to be complied with (by Parties, Party Agents, BSC Agents, BSCCo, the Panel and others) in, and other matters relating to, the implementation of The Code;
Common Distribution Charging Methodology (CDCM)	The CDCM used for calculating charges to Designated Properties as required by standard licence condition 13A of the Electricity Distribution Licence.
Connection Agreement	An agreement between an LDNO and a Customer which provides that the Customer has the right for its connected installation to be and remain directly or indirectly connected to that LDNO's Distribution System.
Connection Type	Defines the physical connection as one of four valid types for metered supplies: 'W' Whole Current; 'L' Low Voltage (LV) Current Transformer; 'H' High Voltage (HV) Current Transformer; or 'E' Extra High Voltage (EHV) Current Transformer (E). It will also include a value of 'U' for unmetered connections.
Central Volume Allocation (CVA)	As defined in the BSC.
Customer	A person to whom a User proposes to supply, or for the time being supplies, electricity through an exit point, or from who, a User or any relevant exempt Supplier, is entitled to recover charges, compensation or an account of profits in respect of electricity supplied through an exit point; or A person from whom a User purchases, or proposes to purchase, electricity, at an entry point (who may from time to time be supplied with electricity as a Customer of that User (or another electricity Supplier) through an exit point).
Designated EHV Properties	As defined in standard condition 13B of the Electricity Distribution Licence.

Term	Definition
Designated Properties	As defined in standard condition 13A of the Electricity Distribution Licence.
Distribution Connection and Use of System Agreement (DCUSA)	The DCUSA is a multi-party contract between the licensed electricity distributors, suppliers, generators and Offshore Transmission Owners of Great Britain. It is a requirement that all licensed electricity distributors and suppliers become parties to the DCUSA.

Term	Definition
Distributor IDs	These are unique IDs that can be used, with reference to the MPAN, to identify your LDNO. The charges for other network operators can be found on their website.

ID	Distribution Service Area	Company
10	East of England	UK Power Networks
11	East Midlands	Western Power Distribution
12	London	UK Power Networks
13	Merseyside and North Wales	Scottish Power
14	Midlands	Western Power Distribution
15	Northern	Northern Powergrid
16	North Western	Electricity North West
17	Scottish Hydro Electric (and embedded networks in other areas)	Scottish Hydro Electric Power Distribution plc
18	South Scotland	Scottish Power
19	South East England	UK Power Networks
20	Southern Electric (and embedded networks in other areas)	Southern Electric Power Distribution plc
21	South Wales	Western Power Distribution
22	South Western	Western Power Distribution
23	Yorkshire	Northern Powergrid
24	All	Independent Power Networks
25	All	ESP Electricity
26	All	Last Mile Electricity Ltd
27	All	The Electricity Network Company Ltd
29	All	Harlaxton Energy Networks
30	All	Peel Electricity Networks Ltd
31	All	UK Power Distribution Ltd
32	All	Energy Assets Networks Limited
33	All	Eclipse Power Networks Ltd
34	All	Murphy Power Distribution Ltd
35	All	Fulcrum Electricity Assets Ltd
36	All	Vattenfall Networks Ltd
37	All	Forbury Assets Limited
38	All	Indigo Power Limited
39	All	Stark Infra-Electricity Ltd
40	All	Utility Assets Limited
42	All	Advanced Electricity Networks
43	All	IDCSL
45	All	Aurora Utilities Limited
46	All	Aidien Limited
47	All	Vital Energi Power Networks
48	All	E.ON UK Network Assets Limited
51	All	AGR Networks Ltd

Term	Definition
Distribution Network Operator (DNO)	An electricity distributor that operates one of the 14 distribution services areas and in whose Electricity Distribution Licence the requirements of Section B of the standard conditions of that licence have effect.
Distribution Services Area	The area specified by the Gas and Electricity Markets Authority within which each DNO must provide specified distribution services.
Distribution System	The system consisting (wholly or mainly) of electric lines owned or operated by an authorised distributor that is used for the distribution of electricity from: • Grid Supply Points or generation sets or other entry points to the points of delivery to: • Customers or Users or any transmission licensee in its capacity as operator of that licensee's transmission system or the Great Britain (GB) transmission system and includes any remote transmission assets (owned by a transmission licensee within England and Wales) that are operated by that authorised distributor and any electrical plant, electricity meters, and metering equipment owned or operated by it in connection with the distribution of electricity, but does not include any part of the GB transmission system.
DUoS Tariff ID	An identifier assigned to an SVA metering system which is used to assign the use of system charges for Migrated MPANs
EHV Distribution Charging Methodology (EDCM)	The EDCM used for calculating charges to Designated EHV Properties as required by standard licence condition 13B of the Electricity Distribution Licence.
Electricity Distribution Licence	The Electricity Distribution Licence granted or treated as granted pursuant to section 6(1) of the Electricity Act 1989.
Electricity Distributor	Any person who is authorised by an Electricity Distribution Licence to distribute electricity.
Embedded Network	An electricity Distribution System operated by an LDNO and embedded within another Distribution System.
Embedded Network report for DUoS – aggregated data	A report of data by IDNO's DUoS Tariff ID and by IDNO providing counts of MPANs and units consumed
Engineering Recommendation P2/7	A document of the Energy Networks Association, which defines minimum planning standards for security of supply and is referred to in Standard Licence Condition 24 of our Electricity Distribution Licence.
Entry Point	A boundary point at which electricity is exported onto a Distribution System from a connected installation or from another Distribution System, not forming part of the total system (boundary point and total system having the meaning given to those terms in the BSC).
Exit Point	A point of connection at which a supply of electricity may flow from the Distribution System to the Customer's installation or User's installation or the Distribution System of another person.
Extra-High Voltage (EHV)	Nominal voltages of 22kV and above.

Term	Definition
Final Demand Site	As defined in DCUSA Schedule 32
Gas and Electricity Markets Authority (GEMA)	As established by the Utilities Act 2000.
Grid Supply Point (GSP)	A metered connection between the National Grid Electricity Transmission system and the licensee's Distribution System at which electricity flows to or from the Distribution System.
GSP group	A distinct electrical system that is supplied from one or more GSPs for which total supply into the GSP group can be determined for each half hour.
High Voltage (HV)	Nominal voltages of at least 1kV and less than 22kV.
Industry Standing Data (ISD)	Industry Standing Data (ISD) is the reference data used in Settlement processes under MHHS.
Intermittent Generation	Defined in DCUSA Schedule 16 as a generation plant where the energy source of the prime mover cannot be made available on demand, in accordance to the definitions in Engineering Recommendation P2/7.
Invalid Settlement Combination	A Settlement combination that is not recognised as a valid combination in market domain data – see https://www.elexonportal.co.uk/MDDVIEWER.
kVA	Kilovolt ampere.
kVArh	Kilovolt ampere reactive hour.
kW	Kilowatt.
kWh	Kilowatt hour (equivalent to one "unit" of electricity).
LDSO report for DUoS – aggregated data	A report of data by DUoS Tariff ID and Supplier providing counts of MPANs and units consumed
Licensed Distribution Network Operator (LDNO)	The holder of a Licence to distribute electricity.
Line Loss Factor (LLF)	The factor that is used in Settlement to adjust the metering system volumes to take account of losses on the Distribution System.
Line Loss Factor Class (LLFC)	An identifier assigned to an SVA metering system which is used to assign the LLF and use of system charges for Non-Migrated MPANs.
Load Factor	$= \frac{annual\ consumption\ (kWh)}{maximum\ demand\ (kW) \times hours\ in\ year}$
Low Voltage (LV)	Nominal voltages below 1kV.
LV Substation Tariff	This tariff applies as described in DCUSA Schedule 16 Section 141, Note 3, where the metering CT is within, or abutting to the HV/LV substation transformation chamber.

Term	Definition
Market Domain Data (MDD)	MDD is a central repository of reference data available to all Users involved in Settlement. It is essential to the operation of SVA trading arrangements. More information can be found here Market Domain Data - Elexon BSC
Market Segment	Market Segment is derived from the Meter Type and Connection Type using a defined set of business rules. There are three Market Segments: Smart and Non-Smart (Including Smart Meters with Settlement Period level data available, Smart Meters with only Register Readings available and Non-Smart Meters with Register Readings); Advanced (which are Advanced Metering Systems with Settlement Period level data available); Unmetered
Market-Wide HH Settlement (MHHS)	Market-wide Half-Hourly Settlement (MHHS) is a key enabler of the flexibility to support the transition to Net Zero. The MHHS Programme will contribute to a more cost-effective electricity system, encouraging more flexible use of energy and helping consumers lower their bills.
Maximum Export Capacity (MEC)	The MEC of apparent power expressed in kVA that has been agreed can flow through the entry point to the Distribution System from the Customer's installation as specified in the connection agreement.
Maximum Import Capacity (MIC)	The MIC of apparent power expressed in kVA that has been agreed can flow through the exit point from the Distribution System to the Customer's installation as specified in the connection agreement.
Measurement Class	A classification of Metering Systems used in the BSC which indicates how consumption is measured, i.e.: • Measurement Class A – non-half-hourly metering equipment; • Measurement Class B – non-half-hourly unmetered supplies; • Measurement Class C – half-hourly metering equipment at or above 100kW premises; • Measurement Class D – half-hourly unmetered supplies; • Measurement Class E – half-hourly metering equipment below 100kW premises, and from 5 November 2015, with current transformer; • Measurement Class F – half hourly metering equipment at below 100kW premises with current transformer or whole current, and at domestic premises; and • Measurement Class G – half hourly metering equipment at below 100kW premises with whole current and not at domestic premises.
Meter Timeswitch Code (MTC)	MTCs are three digit codes allowing Suppliers to identify the metering installed in Customers' premises. They indicate whether the meter is single or multi-rate, pre-payment or credit, or whether it is 'related' to another meter. Further information can be found in MDD.
Metering Point	The point at which electricity that is exported to or imported from the licensee's Distribution System is measured, is deemed to be measured, or is intended to be measured and which is registered pursuant to the provisions of the REC. For the purposes of this statement, GSPs are not 'Metering Points'.

Term	Definition
Metering Point Administration Number (MPAN)	A number relating to a Metering Point under the REC.
Metering System	Particular commissioned metering equipment installed for the purposes of measuring the quantities of exports and/or imports at the exit point or entry point.
Metering System Identifier (MSID)	MSID is a term used throughout the BSC and its subsidiary documents and has the same meaning as MPAN as used under the REC.
Migrated MPANs	Migration refers to the process by which MPANs are migrated from the legacy arrangements to the new MHHS arrangements.
Nested Networks	This refers to a situation where there is more than one level of Embedded Network and therefore nested Distribution Systems between LDNOs (e.g. host DNO→primary nested DNO→ secondary nested DNO→Customer).
Non-Final Demand (NFD) Site	As defined in DCUSA Schedule 32.
Non-Migrated MPANs	This refers to the status when an MPAN is on the legacy arrangements and before migrating under MHHS.
Non-Intermittent Generation	Defined in DCUSA Schedule 16 as a generation plant where the energy source of the prime mover can be made available on demand, in accordance with the definitions in Engineering Recommendation P2/7.
Ofgem	Office of Gas and Electricity Markets – Ofgem is governed by GEMA and is responsible for the regulation of the distribution companies.
Profile Class (PC)	A categorisation applied to NHH MPANs and used in settlement to group Customers with similar consumption patterns to enable the calculation of consumption profiles.
Retail Energy Code (REC)	A code that consolidates the switching arrangements historically set out in the Master Registration Agreement (MRA) and the Supply Point Administration Agreement (SPAA) (for gas) into one dual-fuel code. Provides a governance mechanism to manage the processes established between electricity suppliers and distribution companies to enable electricity suppliers to transfer customers. It includes terms for the provision of Metering Point Administration Services (MPAS) Registrations.
Settlement	The determination and settlement of amounts payable in respect of charges (including reconciling charges) in accordance with the BSC.
Settlement Class (SC)	The combination of Profile Class, Line Loss Factor Class, Time Pattern Regime and Standard Settlement Configuration, by Supplier within a GSP group and used for Settlement.
Standard Settlement Configuration (SSC)	A standard metering configuration relating to a specific combination of Time Pattern Regimes.
Supercustomer	The method of billing Users for use of system on an aggregated basis, grouping together consumption and standing charges for all similar NHH metered Customers or aggregated HH metered Customers. Also referred to as Aggregate Billing.

Term	Definition
Supercustomer DUoS Report	A report of profiled data by Settlement Class providing counts of MPANs and units consumed.
Supplier	An organisation with a supply licence responsible for electricity supplied to and/or exported from a Metering Point.
Supplier Volume Allocation (SVA)	As defined in the BSC.
Time Pattern Regime (TPR)	The pattern of switching behaviour through time that one or more meter registers follow.
Unmetered Supplies	Exit points deemed to be suitable as unmetered supplies as permitted in the Electricity (Unmetered Supply) Regulations 2001 and where operated in accordance with BSC procedure 520[11].
Use of System Charges	Charges which are applicable to those parties which use the Distribution System.
User	Someone that has a use of system agreement with the DNO e.g. a Supplier, generator or other LDNO.

[11] Balancing and Settlement Code Procedures are available from BSC Procedures - Elexon Digital BSC

Appendix 2 - Guidance notes[12]

Background

1.1. The electricity bill from your Supplier contains an element of charge to cover electricity distribution costs. This distribution charge covers the cost of operating and maintaining a safe and reliable Distribution System that forms the 'wires' that transport electricity between the national transmission system and end users such as homes and businesses. Our Distribution System includes overhead lines, underground cables, as well as substations and transformers.

1.2. In most cases, your Supplier is invoiced for the distribution charge and this is normally part of your total bill. In some cases, for example business users, the Supplier may pass through the distribution charge as an identifiable line item on the electricity bill.

1.3. Where electricity is generated at a premises your Supplier may receive a credit for energy that is exported on to the Distribution System. These credits are intended to reflect that the exported generation may reduce the need for traditional demand led reinforcement of the Distribution System.

1.4. Understanding your distribution charges could help you reduce your costs and increase your credits. This is achieved by understanding the components of the charge to help you identify whether there may be opportunities to change the way you use the Distribution System.

Meter point administration

1.5. We are responsible for managing the electricity supply points that are connected to our Distribution System. Typically every supply point is identified by a Meter Point Administration Number (MPAN). A few supply points may have more than one MPAN depending on the metering configuration (e.g. a school which may have an MPAN for the main supply and an MPAN for catering).

1.6. The full MPAN is a 21 digit number, preceded by an 'S' and includes supplementary data. The MPAN applicable to a supply point is found on the electricity bill from your Supplier. This number enables you to establish who your electricity distributor is, details of the characteristics of the supply and importantly the distribution charges that are applicable to your premises.

1.7. The 21-digit number is normally presented in two sections as shown in the following diagram. The top section is supplementary data which gives information about the characteristics of supply, while the bottom 'core' is the unique identifier.

Full MPAN diagram

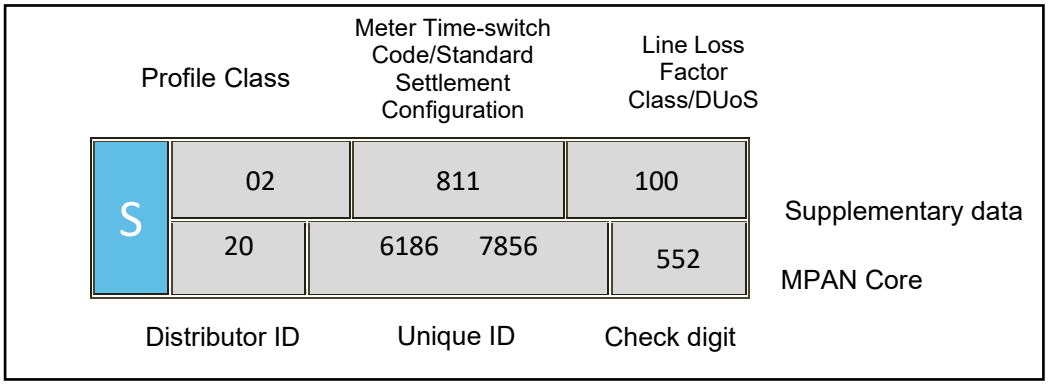

1.8. Generally, you will only need to know the Distributor ID and LLFC/DUoS Tariff ID to identify the distribution charges for your premises. However, there are some premises where charges are specific to that site. In these instances the charges are identified by the MPAN core. The Distributor ID for SEPD is 20. Other Distributor IDs can be referenced in the Glossary.

[12] These guidance notes are provided for additional information and do not form part of the application of charges.

1.9. Additionally it can be useful to understand the profile class provided in the supplementary data. The profile class will be a number between 00 and 08. The following list provides details of the allocation of profile classes to types of Customers:

- '01' – Domestic Customers with unrestricted supply
- '02' – Domestic Customers with restricted load, for example off-peak heating
- '03' – Non-domestic Customers with unrestricted supply
- '04' – Non-domestic Customers with restricted load, for example off-peak heating
- '05' – Non-domestic maximum demand Customers with a Load Factor of less than 20%
- '06' – Non-domestic maximum demand Customers with a Load Factor between 20% and 30%
- '07' – Non-domestic maximum demand Customers with a Load Factor between 30% and 40%
- '08' – Non-domestic maximum demand Customers with a Load Factor over 40% or non-half-hourly metered generation Customers
- '00' – Half-hourly metered demand and generation Customers (including all Migrated MPANs)

1.10. Unmetered Supplies will be allocated to profile class 01, 08 or 00 depending on the type of load or the measurement method of the load.

1.11. The allocation of the profile class will affect your charges for Non-Migrated MPANs. If you feel that you have been allocated the wrong profile class, please contact your Supplier as they are responsible for this.

Your charges

1.12. All distribution charges that relate to our Distributor ID 20 and to premises within our Distribution Services Area are provided in this statement. For distribution charges which relate to our Distributor ID 20 and to premises connected to an 'out of area' network, please refer to the statement referenced in paragraph 2.74.

1.13. You can identify your charges by referencing your LLFC/DUoS Tariff ID, from Annex 1. If the MPAN is for a Designated EHV Property then the charges will be found in Annex 2. In a few instances, the charges may be contained in Annex 3 or Annex 6. When identifying charges in Annex 2, please note that some LLFCs/DUoS Tariff IDs have more than one charge. In this instance you will need to select the correct charge by cross referencing with the MPAN core provided in the table.

1.14. Once you have identified which charge structure applies to your MPAN then you will be able to calculate an estimate of your distribution charge using the calculator provided in the spreadsheet 'Schedule of charges and other tables' found in the sheet called 'Charge Calculator'. This spreadsheet can be downloaded from www.ssen.co.uk.

Reducing your charges

1.15. The most effective way to reduce your energy charges is to reduce your consumption by switching off or using more energy efficient appliances. However, there are also other potential opportunities to reduce your distribution charges; for example, it may be beneficial to shift demand or generation to a better time period. Demand use is likely to be cheaper outside the peak periods and generation credits more beneficial during peak periods, although the ability to directly benefit will be linked to the structure of your supply charges.

1.16. The calculator mentioned above provides the opportunity to establish a forecast of the change in distribution charges that could be achieved if you are able to change any of the consumption related inputs.

Reactive power and reactive power charges

1.17. Reactive power is a separately charged component of connections that are half-hourly metered. Reactive power charges are generally avoidable if 'best practice' design of the properties' electrical installation has been provided in order to maintain a power factor between 0.95 and unity at the Metering Point.

1.18. Reactive Power (kVArh) is the difference between working power (active power measured in kW) and total power consumed (apparent power measured in kVA). Essentially it is a measure of how efficiently electrical power is transported through an electrical installation or a Distribution System.

1.19. Power flowing with a power factor of unity results in the most efficient loading of the Distribution System. Power flowing with a power factor of less than 0.95 results in much higher losses in the Distribution System, a need to potentially provide higher capacity electrical equipment and consequently a higher bill for you the consumer. A comparatively small improvement in power factor can bring about a significant reduction in losses since losses are proportional to the square of the current.

1.20. Different types of electrical equipment require some 'reactive power' in addition to 'active power' in order to work effectively. Electric motors, transformers and fluorescent lighting, for example, may produce poor power factors due to the nature of their inductive load. However, if good design practice is applied then the poor power factor of appliances can be corrected as near as possible to source. Alternatively, poor power factor can be corrected centrally near to the meter.

1.21. There are many advantages that can be achieved by correcting poor power factor. These include: reduced energy bills through lower reactive charges, lower capacity charges and reduced power consumption and reduced voltage drop in long cable runs.

Site-specific EDCM charges

1.22. A site classified as a Designated EHV Property is subject to a locational-based charging methodology (referred to as EDCM) for higher voltage network users. Distributors use one of two approved approaches: Long Run Incremental Cost (LRIC) or Forward Cost Pricing (FCP); we use the FCP. The EDCM will apply to Customers connected at Extra-High Voltage or connected at High Voltage and metered at an Extra-High Voltage or High Voltage substation.

1.23. EDCM charges and credits are site-specific, reflecting the degree to which the local and higher voltage networks have the capacity to serve more demand without the need to upgrade the electricity infrastructure. The conditions for eligibility of generators for credits within the EDCM are specified in the applicable charging methodology. Generators that benefit from an exemption from UoS charges for generation, or that are intermittent in accordance to the definitions in Engineering Recommendation P2/7 and that cannot maintain production for a continuous period of several weeks, are unlikely to be eligible for EDCM credits. In any event, eligibility for EDCM credits depends on a site-specific assessment of whether the generation can be considered to have a contribution to security of supply under Engineering Recommendation P2/7.

1.24. The charges under the EDCM comprise of the following individual components:

a) **Fixed charge (pence/MPAN/day)**- This charge recovers operational costs associated with those connection assets that are provided for the 'sole' use of the Customer and a residual amount to ensure recovery of our regulated allowed revenue.

b) **Capacity charge (pence/kVA/day)** -This charge comprises the relevant FCP component, the National Grid Electricity Transmission cost and other regulated costs.

Capacity charges are levied on the MIC, MEC, and any exceeded capacity. You may wish to review your MIC or MEC periodically to ensure it remains appropriate for your needs as you may be paying for more capacity than you require. If you wish to make changes, contact us via the details in paragraph 1.13.

The FCP cost is locational and reflects our assessment of future network reinforcement necessary at the voltage of connection (local) and beyond at all higher voltages (remote) relevant to the Customer's connection. This results in the allocation of higher costs, in more capacity congested parts of the network reflecting the greater likelihood of future reinforcement in these areas and the allocation of lower costs in less congested parts of the network. The local FCP cost is included in the capacity charge.

Our regulated costs include direct and indirect operational costs. The capacity charge recovers these costs using the Customer usage profile and the relevant assets being used to transport electricity between the source substation and Customer's Metering Point.

c) **Super-red unit charge (pence/kWh**) - This charge recovers the remote FCP component. The charge is positive for import and negative for export which means you can either reduce your charges by minimising consumption or increasing export at those times. The charge is applied to consumption during the Super-red time period as detailed in Annex 2.

1.25. Future charge rates may be affected by consumption during the Super-red time period, therefore reducing consumption in the Super-red time period may be beneficial.

1.26. **Reactive Power** - The EDCM does not include a separate charge component for any reactive power flows (kVAr) for either demand or generation. However, the EDCM charges do reflect the effect on the network of the Customer's power factor, for example, unit charges can increase if your site power factor is poor (lower than 0.95). Improving your site's power factor will also reduce the maximum demand (kVA) for the same power consumed in kW thus providing scope to reduce your agreed capacity requirements.

Additional Notes

Domestic Aggregated (Related MPAN) and Non-Domestic Aggregated (Related MPAN) are supplementary, off-peak, tariffs to their standard, Domestic Aggregated and Non-Domestic Aggregated tariffs, respectively. Related MPAN, off-peak, terms are only available to Metering Points that are already on such terms and where: a) the Customer retains the original off-peak equipment and the circuits from which the off-peak supply is taken are separated from all other circuits; b) the function of the off-peak equipment is not duplicated by other equipment connected to the other circuits; and c) "off-peak equipment" means appliances such as thermal storage heaters, storage water heaters or other equipment as agreed by SEPD
Generally, Domestic DUoS tariffs are available only to premises: a) used exclusively as a single private residence; or b) comprising more than one private residence where the estimated maximum demand of the supply does not exceed 25 kW

Appendix 3 – Non-Final Demand Site Certificate

A certificate set out in the form of the example shown below should be submitted to confirm that a site qualifies as a Non-Final Demand Site.

Non-Final Demand Site Certificate of Compliance

This is to certify that the Metering System listed below qualifies as compliant with the criteria of a Non-Final Demand Site, for the purposes of Use of System charges, and that:

The property is a Single Site at which either or both Electricity Storage and/or Electricity Generation occurs (whether the facility(ies) at the site are operating or being commissioned, repaired, or decommissioned), and that:

a) has an export Metering Point or Metering System and an import Metering Point or Metering System with associated metering equipment which only measures export from Electricity Storage and/or Electricity Generation and import for or directly relating to Electricity Storage and/or Electricity Generation (and not export from another source and/or import for another activity); and
   i. if registered in an MPAS Registration System, is subject to certification from a Supplier Party that the site meets the criteria in paragraph (a) above, which certificate has been provided to the DNO/IDNO Party; or
   ii. if registered in CMRS, is subject to certification from the Customer (or its CVA Registrant) that the site meets the criteria in paragraph (a) above, which certificate has been provided to the DNO/IDNO Party.

For the purposes of this declaration, the term Non-Final Demand Site has the meaning given to it in the DCUSA.

Metering System Site Address:

Qualifying Import MPAN/MSID(s)	Qualifying Export MPAN/MSID(s)

I declare that I understand the qualification requirements and certify that the above Metering System meets the criteria of a Non-Final Demand Site.

Authorised signatory:

Name and designation:

On behalf of company:

Date:

Annex 1 - Schedule of Charges for use of the Distribution System by LV and HV Designated Properties, and Unmetered Supplies

Southern Electric Power Distribution plc - Effective from 1st April 2027 - Final LV and HV charges

Time Bands for LV and HV Designated Properties			
Time periods	**Red Time Band**	**Amber Time Band**	**Green Time Band**
Monday to Friday (Including Bank Holidays) All Year	16:30 - 19:30		
Monday to Friday (Including Bank Holidays) All Year		07:00 - 16:30 19:30 - 22:00	
Monday to Friday (Including Bank Holidays) All Year			00:00 - 07:00 22:00 - 24:00
Saturday and Sunday All Year		09:30 - 21:30	00:00 - 09:30 21:30 - 24:00
Notes	All the above times are in UK Clock time		

Time Bands for Unmetered Properties			
	Black Time Band	**Yellow Time Band**	**Green Time Band**
Monday to Friday (Including Bank Holidays) March to October Inclusive		07:00 - 22:00	
Monday to Friday (Including Bank Holidays) November to February Inclusive	16:30 - 19:30	07:00 - 16:30 19:30 - 22:00	
Monday to Friday (Including Bank Holidays) April to March Inclusive			00:00 - 07:00 22:00 - 24:00
Saturday and Sunday All Year		09:30 - 21:30	00:00 - 09:30 21:30 - 24:00
Notes	All the above times are in UK Clock time		

Tariff name	Open LLFCs / DUoS Tariff IDs	PCs	Red/black unit charge p/kWh	Amber/yellow unit charge p/kWh	Green unit charge p/kWh	Fixed charge p/MPAN/day	Capacity charge p/kVA/day	Exceeded capacity charge p/kVA/day	Reactive power charge p/kVArh	Closed LLFCs / DUoS Tariff IDs
Domestic Aggregated or CT with Residual	**100-111, 154-157, 160-161, 456, Q55**	**0, 1, 2**	**12.981**	**2.124**	**0.155**	**11.04**				**124-125**
Domestic Aggregated (Related MPAN)	**115, 121, 150-153**	**2**	**12.981**	**2.124**	**0.155**					**112-114, 116-120, 122-123**

Tariff name	Open LLFCs / DUoS Tariff IDs	PCs	Red/black unit charge p/kWh	Amber/yellow unit charge p/kWh	Green unit charge p/kWh	Fixed charge p/MPAN/day	Capacity charge p/kVA/day	Exceeded capacity charge p/kVA/day	Reactive power charge p/kVArh	Closed LLFCs / DUoS Tariff IDs
Non-Domestic Aggregated or CT No Residual	H00, H05, H10, H15, H20, H25, H30, H35, H40, H45, H50, H55, H60, H70, H75, H80, Q00, Q56	0, 3, 4, 5-8	12.515	2.048	0.149	14.30				Q35, Q40
Non-Domestic Aggregated or CT Band 1	H01, H06, H11, H16, H21, H26, H31, H36, H41, H46, H51, H56, H61, H71, H76, H81, Q01, Q57	0, 3, 4, 5-8	12.515	2.048	0.149	14.19				Q36, Q41
Non-Domestic Aggregated or CT Band 2	H02, H07, H12, H17, H22, H27, H32, H37, H42, H47, H52, H57, H62, H72, H77, H82, Q02, Q58	0, 3, 4, 5-8	12.515	2.048	0.149	13.64				Q37, Q42
Non-Domestic Aggregated or CT Band 3	H03, H08, H13, H18, H23, H28, H33, H38, H43, H48, H53, H58, H63, H73, H78, H83, Q03, Q59	0, 3, 4, 5-8	12.515	2.048	0.149	12.64				Q38, Q43
Non-Domestic Aggregated or CT Band 4	H04, H09, H14, H19, H24, H29, H34, H39, H44, H49, H54, H59, H64, H74, H79, H84, Q04, Q60	0, 3, 4, 5-8	12.515	2.048	0.149	9.45				Q39, Q44
Non-Domestic Aggregated (related MPAN)	140, 144	4	12.515	2.048	0.149					138-139, 141-143, 145

Tariff name	Open LLFCs / DUoS Tariff IDs	PCs	Red/black unit charge p/kWh	Amber/yellow unit charge p/kWh	Green unit charge p/kWh	Fixed charge p/MPAN/day	Capacity charge p/kVA/day	Exceeded capacity charge p/kVA/day	Reactive power charge p/kVArh	Closed LLFCs / DUoS Tariff IDs
LV Site Specific No Residual	H85	0	8.548	1.237	0.085	25.25	11.27	11.27	0.267	
LV Site Specific Band 1	H86	0	8.548	1.237	0.085	16.93	11.27	11.27	0.267	
LV Site Specific Band 2	H87	0	8.548	1.237	0.085	11.63	11.27	11.27	0.267	
LV Site Specific Band 3	H88	0	8.548	1.237	0.085	1.38	11.27	11.27	0.267	
LV Site Specific Band 4	H89	0	8.531	1.219	0.068	0.00	11.27	11.27	0.267	
LV Sub Site Specific No Residual	H90	0	4.735	0.521	0.030	58.02	11.43	11.43	0.144	
LV Sub Site Specific Band 1	H91	0	4.735	0.521	0.030	49.69	11.43	11.43	0.144	
LV Sub Site Specific Band 2	H92	0	4.735	0.521	0.030	44.40	11.43	11.43	0.144	
LV Sub Site Specific Band 3	H93	0	4.735	0.521	0.030	34.15	11.43	11.43	0.144	
LV Sub Site Specific Band 4	H94	0	4.717	0.503	0.013	32.77	11.43	11.43	0.144	
HV Site Specific No Residual	Q45	0	3.743	0.382	0.021	241.70	11.04	11.04	0.104	
HV Site Specific Band 1	Q46	0	3.743	0.382	0.021	188.01	11.04	11.04	0.104	
HV Site Specific Band 2	Q47	0	3.743	0.382	0.021	108.64	11.04	11.04	0.104	

Tariff name	Open LLFCs / DUoS Tariff IDs	PCs	Red/black unit charge p/kWh	Amber/yellow unit charge p/kWh	Green unit charge p/kWh	Fixed charge p/MPAN/day	Capacity charge p/kVA/day	Exceeded capacity charge p/kVA/day	Reactive power charge p/kVArh	Closed LLFCs / DUoS Tariff IDs
HV Site Specific Band 3	Q48	0	3.742	0.380	0.020	0.00	11.04	11.04	0.104	
HV Site Specific Band 4	Q49	0	3.725	0.363	0.003	0.00	11.04	11.04	0.104	
Unmetered Supplies	500-503, 520	0, 1 or 8	34.306	5.367	3.203					
LV Generation Aggregated	931	0 or 8	-8.138	-1.332	-0.097	0.00				
LV Sub Generation Aggregated	932	0 or 8	-6.914	-1.043	-0.073	0.00				
LV Generation Site Specific	1-2, 909	0	-8.138	-1.332	-0.097	0.00			0.331	
LV Generation Site Specific no RP charge	7-8	0	-8.138	-1.332	-0.097	0.00				
LV Sub Generation Site Specific	3-4	0	-6.914	-1.043	-0.073	0.00			0.244	
LV Sub Generation Site Specific no RP charge	146-147	0	-6.914	-1.043	-0.073	0.00				
HV Generation Site Specific	5-6, 910	0	-4.793	-0.527	-0.031	466.72			0.200	
HV Generation Site Specific no RP charge	148-149	0	-4.793	-0.527	-0.031	466.72				

Annex 2 - Schedule of Charges for use of the Distribution System by Designated EHV Properties (including LDNOs with Designated EHV Properties/end-users)

Note: The list of MPANs / MSIDs provided may be incomplete; the DNO reserves the right to apply the listed charges to any other MPANs / MSIDs associated with the site.

Southern Electric Power Distribution plc - Effective from 1st April 2027 - Final Designated EDCM charges

Time Periods for Designated EHV Properties	
Time periods	**Super Red Time Band**
Monday to Friday (Including Bank Holidays) November to February Inclusive	16:30 - 19:30
Notes	All the above times are in UK Clock time

Import LLFC / DUoS Tariff ID	Import MPANs/MSIDs	Export LLFC / DUoS Tariff ID	Export MPANs/MSIDs	Name	Residual Charging Band	Import Super Red unit charge (p/kWh)	Import fixed charge (p/day)	Import capacity charge (p/kVA/day)	Import exceeded capacity charge (p/kVA/day)	Export Super Red unit charge (p/kWh)	Export fixed charge (p/day)	Export capacity charge (p/kVA/day)	Export exceeded capacity charge (p/kVA/day)
700	2000027373741			Tariff 1	4	0.093	173418.45	1.43	1.43	0.000	0.00	0.00	0.00
701	2000027366674			Tariff 2	3	0.619	45383.59	2.18	2.18	0.000	0.00	0.00	0.00
702	2000027342238			Tariff 3	2	0.223	21123.65	0.76	0.76	0.000	0.00	0.00	0.00
704	2000027343640	734	2000050928900	Tariff 4	0	0.000	3.73	0.81	0.81	0.000	512.03	0.05	0.05
707	2000027427398	737	2000050935800	Tariff 6	1	0.091	2292.70	0.86	0.86	-0.092	170.13	0.05	0.05
708	2000052675995			Tariff 7	2	0.000	23508.41	1.86	1.86	0.000	0.00	0.00	0.00
709	2000054624149	749		Tariff 8	2	1.309	12496.38	2.15	2.15	0.000	102.17	0.05	0.05

Import LLFC / DUoS Tariff ID	Import MPANs/MSIDs	Export LLFC / DUoS Tariff ID	Export MPANs/MSIDs	Name	Residual Charging Band	Import Super Red unit charge (p/kWh)	Import fixed charge (p/day)	Import capacity charge (p/kVA/day)	Import exceeded capacity charge (p/kVA/day)	Export Super Red unit charge (p/kWh)	Export fixed charge (p/day)	Export capacity charge (p/kVA/day)	Export exceeded capacity charge (p/kVA/day)
710	2000027387210, 2000054817604, 2000055899218	740	2000055899236, 2000055899245, 2000055205806	Tariff 9	4	0.000	150759.79	0.63	0.63	0.000	7739.79	0.05	0.05
711	2000027852497			Tariff 10	2	0.000	24725.28	2.27	2.27	0.000	0.00	0.00	0.00
712	2000055085297			Tariff 11	3	0.825	36854.72	1.43	1.43	0.000	0.00	0.00	0.00
713	2000055085302			Tariff 12	0	0.837	17714.09	1.61	1.61	0.000	0.00	0.00	0.00
714	2000027366665			Tariff 13	4	1.300	149248.10	2.07	2.07	0.000	0.00	0.00	0.00
715	2000051063430			Tariff 14	2	0.608	12000.90	4.65	4.65	0.000	0.00	0.00	0.00
716	2000027366762			Tariff 15	1	0.000	2307.59	3.57	3.57	0.000	0.00	0.00	0.00
717	2000027373403			Tariff 16	1	0.854	2307.59	2.85	2.85	0.000	0.00	0.00	0.00
718	2000050571060	738	2000051080338	Tariff 17	3	0.858	32096.68	1.63	1.63	0.000	2059.24	0.05	0.05
719	2000027419449			Tariff 18	1	1.409	2307.59	1.18	1.18	0.000	0.00	0.00	0.00
800	2000050277851			Tariff 19	3	0.068	31147.22	1.48	1.48	0.000	0.00	0.00	0.00
801	2000050393707			Tariff 20	3	0.000	31147.22	1.74	1.74	0.000	0.00	0.00	0.00
802	2000027366841			Tariff 21	1	0.400	2519.65	2.62	2.62	0.000	0.00	0.00	0.00
803	2000050277513			Tariff 22	1	0.000	3711.39	1.67	1.67	0.000	0.00	0.00	0.00
817	2000050481327			Tariff 23	0	0.000	1169.28	2.25	2.25	0.000	0.00	0.00	0.00
837	2000050481309			Tariff 24	0	0.000	1169.28	2.69	2.69	0.000	0.00	0.00	0.00
804	2000050275631, 2000056717878, 2000056717887			Tariff 25	4	0.000	150063.67	1.65	1.65	0.000	0.00	0.00	0.00
805	2000027474820			Tariff 26	1	0.000	2520.99	1.47	1.47	0.000	0.00	0.00	0.00
806	2000027454188			Tariff 27	2	0.000	12935.28	1.56	1.56	0.000	0.00	0.00	0.00

Import LLFC / DUoS Tariff ID	Import MPANs/MSIDs	Export LLFC / DUoS Tariff ID	Export MPANs/MSIDs	Name	Residual Charging Band	Import Super Red unit charge (p/kWh)	Import fixed charge (p/day)	Import capacity charge (p/kVA/day)	Import exceeded capacity charge (p/kVA/day)	Export Super Red unit charge (p/kWh)	Export fixed charge (p/day)	Export capacity charge (p/kVA/day)	Export exceeded capacity charge (p/kVA/day)
807	2000027454452			Tariff 28	2	0.000	12301.18	1.98	1.98	0.000	0.00	0.00	0.00
808	2000052503790			Tariff 29	3	0.624	31147.22	1.69	1.69	0.000	0.00	0.00	0.00
809	2000027297816			Tariff 30	2	0.000	12391.44	0.77	0.77	0.000	0.00	0.00	0.00
810	2000050467030	918	2000027292534	Tariff 31	2	0.000	14739.99	1.03	1.03	0.000	3072.90	0.05	0.05
811	2000051063927			Tariff 32	3	0.000	30629.56	4.25	4.25	0.000	0.00	0.00	0.00
812	2000050544330			Tariff 34	1	0.221	2155.66	1.74	1.74	0.000	0.00	0.00	0.00
813	2000055209191, 2000055209207, 2000055209216, 2000055209225, 2000055209234, 2000055209252, 2000055209243, 2000057677472, 2000057682445, 2000060517798			Tariff 35	4	0.000	157590.23	3.26	3.26	0.000	0.00	0.00	0.00
814	2000027340036	929	2000054899591	Tariff 36	1	0.221	2639.52	0.84	0.84	0.000	758.59	0.05	0.05
815	2000027454648	924	2000054397290	Tariff 37	3	0.000	33213.45	1.42	1.42	0.000	1535.38	0.05	0.05
816	2000027306995	937	2000050795630	Tariff 38	2	0.000	12460.53	2.98	2.98	0.000	991.80	0.05	0.05
818	2000050277160			Tariff 39	4	0.000	209514.51	2.52	2.52	0.000	0.00	0.00	0.00

Import LLFC / DUoS Tariff ID	Import MPANs/MSIDs	Export LLFC / DUoS Tariff ID	Export MPANs/MSIDs	Name	Residual Charging Band	Import Super Red unit charge (p/kWh)	Import fixed charge (p/day)	Import capacity charge (p/kVA/day)	Import exceeded capacity charge (p/kVA/day)	Export Super Red unit charge (p/kWh)	Export fixed charge (p/day)	Export capacity charge (p/kVA/day)	Export exceeded capacity charge (p/kVA/day)
819	2000027466068			Tariff 40	1	0.000	2312.34	2.48	2.48	0.000	0.00	0.00	0.00
7174	7174	7174	7174	Tariff 41	0	0.000	312.65	0.81	0.81	0.000	0.00	0.00	0.00
823	2000053759147	923	2000053759174	Tariff 43	2	0.000	11904.69	0.83	0.83	0.000	2171.69	0.05	0.05
824	2000027366498			Tariff 44	3	1.376	44272.14	2.46	2.46	0.000	0.00	0.00	0.00
825	2000027323866	933		Tariff 45	2	0.000	27431.68	3.28	3.28	0.000	13934.77	0.05	0.05
826	2000027318634			Tariff 46	2	0.000	22323.08	1.09	1.09	0.000	0.00	0.00	0.00
827	2000052503805			Tariff 47	3	0.430	31147.22	1.90	1.90	0.000	0.00	0.00	0.00
829	2000050275552			Tariff 49	4	0.000	158405.92	1.48	1.48	0.000	0.00	0.00	0.00
820	2000052993042			Tariff 50	0	0.805	357.05	1.04	1.04	0.000	0.00	0.00	0.00
830	2000050277986			Tariff 51	4	0.000	187759.93	1.15	1.15	0.000	0.00	0.00	0.00
854	2000052369584			Tariff 52	4	0.000	181245.39	2.44	2.44	0.000	0.00	0.00	0.00
835	2000050275543			Tariff 53	4	0.000	152314.98	1.63	1.63	0.000	0.00	0.00	0.00
836	2000051425787			Tariff 54	2	0.000	12912.12	2.85	2.85	0.000	0.00	0.00	0.00
4033	4033	4032	4032	Tariff 55	0	0.000	0.26	1.89	1.89	0.000	13.01	0.05	0.05
4548	4548	4548	4548	Tariff 56	0	0.000	0.05	1.17	1.17	0.000	13.23	0.05	0.05
839	2000053874062	925	2000053874080	Tariff 57	0	0.000	3.23	1.61	1.61	0.000	452.59	0.05	0.05
505	2000053874105	521	2000053874123	Tariff 58	0	0.000	4.85	1.11	1.11	0.000	662.60	0.05	0.05
840	2000051011929	930	2000051034322	Tariff 59	0	0.000	83.41	0.77	0.77	0.000	4170.60	0.05	0.05
7393	7393	7390	7390	Tariff 60	1	0.902	2162.19	0.97	0.97	0.000	614.00	0.05	0.05
7394	7394	7391	7391	Tariff 61	1	0.000	2159.76	0.99	0.99	0.000	616.43	0.05	0.05
844	2000027491213	917	2000050932697	Tariff 62	0	0.000	28.36	0.77	0.77	0.000	1985.41	0.05	0.05
844	2000050044320	917	2000051079954	Tariff 63	0	0.000	27.46	0.94	0.94	0.000	576.67	0.05	0.05
844	2000052468930	917	2000052231228	Tariff 64	0	0.000	2.80	1.10	1.10	0.000	0.00	0.00	0.00
845	2000050437959			Tariff 65	2	0.000	17969.21	2.30	2.30	0.000	0.00	0.00	0.00

Import LLFC / DUoS Tariff ID	Import MPANs/MSIDs	Export LLFC / DUoS Tariff ID	Export MPANs/MSIDs	Name	Residual Charging Band	Import Super Red unit charge (p/kWh)	Import fixed charge (p/day)	Import capacity charge (p/kVA/day)	Import exceeded capacity charge (p/kVA/day)	Export Super Red unit charge (p/kWh)	Export fixed charge (p/day)	Export capacity charge (p/kVA/day)	Export exceeded capacity charge (p/kVA/day)
846	2000050552457	927	2000050570312	Tariff 66	0	1.742	5.47	0.76	0.76	0.000	273.27	0.05	0.05
847	2000050662007	928	2000050662016	Tariff 67	2	0.000	11763.81	0.92	0.92	0.000	678.38	0.05	0.05
849	2000052866920			Tariff 68	2	0.000	18875.88	3.39	3.39	0.000	0.00	0.00	0.00
851	2000051336018			Tariff 69	2	0.000	13267.07	1.95	1.95	0.000	0.00	0.00	0.00
853	2000052659600	938	2000052659585	Tariff 70	1	0.000	2520.39	0.76	0.76	0.000	0.00	0.00	0.00
855	2000050276556			Tariff 71	2	0.521	12301.18	1.66	1.66	0.000	0.00	0.00	0.00
856	2000054315483			Tariff 72	3	0.000	30513.13	1.43	1.43	0.000	0.00	0.00	0.00
857	2000054359392			Tariff 73	3	0.000	30246.33	1.87	1.87	0.000	0.00	0.00	0.00
858	2000051445019	921	2000051445143	Tariff 74	0	0.226	15.22	0.86	0.86	0.000	608.62	0.05	0.05
859	2000054431783	922	2000054431792	Tariff 75	0	0.000	17.98	0.76	0.76	0.000	359.58	0.05	0.05
860	2000054674344	939	2000054674353	Tariff 76	0	0.000	333.63	1.21	1.21	0.000	3707.00	0.05	0.05
7303	7303			Tariff 77	3	0.208	29879.03	3.18	3.18	0.000	0.00	0.00	0.00
863	2000055109274	941	2000055109283	Tariff 78	1	0.000	2153.22	3.76	3.76	0.000	435.83	0.05	0.05
852	2000055132440	926	2000055132450	Tariff 79	0	0.000	4.32	1.23	1.23	0.000	432.38	0.05	0.05
862	2000055138985	940	2000055138762	Tariff 80	0	0.000	1.74	1.16	1.16	0.000	434.96	0.05	0.05
864	2000055125815	942	2000055125824	Tariff 81	0	0.221	9.61	1.49	1.49	0.000	864.79	0.05	0.05
865	2000055125842	943	2000055125833	Tariff 82	0	0.221	4.25	2.05	2.05	0.000	1275.24	0.05	0.05
866	2000055213940	944	2000055213969	Tariff 83	1	0.221	2154.37	2.10	2.10	0.000	606.50	0.05	0.05
861	2000055029502			Tariff 84	4	0.000	148316.63	2.34	2.34	0.000	0.00	0.00	0.00
861	2000055029511			Tariff 85	0	0.000	155.24	2.24	2.24	0.000	0.00	0.00	0.00
861	2000055029520			Tariff 86	0	0.000	155.24	2.26	2.26	0.000	0.00	0.00	0.00
861	2000055029530			Tariff 87	0	0.000	155.24	2.41	2.41	0.000	0.00	0.00	0.00
861	2000055029549			Tariff 88	0	0.000	155.24	2.44	2.44	0.000	0.00	0.00	0.00
861	2000055029558			Tariff 89	0	0.000	155.24	2.22	2.22	0.000	0.00	0.00	0.00

Import LLFC / DUoS Tariff ID	Import MPANs/MSIDs	Export LLFC / DUoS Tariff ID	Export MPANs/MSIDs	Name	Residual Charging Band	Import Super Red unit charge (p/kWh)	Import fixed charge (p/day)	Import capacity charge (p/kVA/day)	Import exceeded capacity charge (p/kVA/day)	Export Super Red unit charge (p/kWh)	Export fixed charge (p/day)	Export capacity charge (p/kVA/day)	Export exceeded capacity charge (p/kVA/day)
7096	7096	7081	7081	Tariff 90	4	0.000	157736.29	1.97	1.97	0.000	10438.80	0.05	0.05
		7095	7095	Tariff 91	0	0.000	0.00	0.00	0.00	0.000	7560.73	0.05	0.05
7098	7098			Tariff 92	0	0.000	13.28	1.92	1.92	0.000	0.00	0.00	0.00
7097	7097			Tariff 93	0	0.000	30294.36	1.79	1.79	0.000	0.00	0.00	0.00
833	2000051300396			Tariff 95	4	0.000	158330.85	1.74	1.74	0.000	0.00	0.00	0.00
867	2000055426205	946	2000055426214	Tariff 96	0	0.000	6.24	1.26	1.26	0.000	623.54	0.05	0.05
868	2000055426232	947	2000055426241	Tariff 97	0	0.000	14.17	1.32	1.32	0.000	1416.64	0.05	0.05
7484	7484	7485	7485	Tariff 98	0	0.000	4.24	1.59	1.59	0.000	1017.08	0.05	0.05
870	2000055580574	949	2000055580583	Tariff 99	0	0.000	7.21	1.35	1.35	0.000	1008.82	0.05	0.05
872	2000055580592	611	2000055580608	Tariff 101	0	0.000	10.32	0.94	0.94	0.000	619.45	0.05	0.05
873	2000055582785	612	2000055582794	Tariff 102	0	0.221	10.10	2.74	2.74	0.000	2019.99	0.05	0.05
874	2000055634982	613	2000055634991	Tariff 103	0	0.000	6.50	1.44	1.44	0.000	649.82	0.05	0.05
875	2000055643198	614	2000055643203	Tariff 104	0	0.222	4.81	1.70	1.70	0.000	624.96	0.05	0.05
705	2000051981890			Tariff 105	3	0.000	30189.52	1.98	1.98	0.000	0.00	0.00	0.00
876	2000055872892	615	2000055872917	Tariff 106	0	0.221	6.25	1.67	1.67	0.000	1500.88	0.05	0.05
877	2000055600255	616	2000055600291	Tariff 107	0	0.000	24.49	1.02	1.02	0.000	1150.81	0.05	0.05
878	2000055600194	617	2000055600200	Tariff 108	0	0.215	19.76	1.08	1.08	0.000	1114.39	0.05	0.05
880	2000055918093	619	2000055918109	Tariff 110	0	0.000	5.20	1.15	1.15	0.000	624.57	0.05	0.05
881	2000055969256	620	2000055969265	Tariff 111	0	1.225	6.30	1.66	1.66	0.000	1260.58	0.05	0.05
882	2000055600352	621	2000055600399	Tariff 112	0	0.000	6.24	1.24	1.24	0.000	623.54	0.05	0.05

Import LLFC / DUoS Tariff ID	Import MPANs/MSIDs	Export LLFC / DUoS Tariff ID	Export MPANs/MSIDs	Name	Residual Charging Band	Import Super Red unit charge (p/kWh)	Import fixed charge (p/day)	Import capacity charge (p/kVA/day)	Import exceeded capacity charge (p/kVA/day)	Export Super Red unit charge (p/kWh)	Export fixed charge (p/day)	Export capacity charge (p/kVA/day)	Export exceeded capacity charge (p/kVA/day)
883	2000055582767	622	2000055582776	Tariff 113	0	0.000	27.66	1.31	1.31	0.000	2765.65	0.05	0.05
884	2000056041495	623	2000056041510	Tariff 114	0	0.599	30.53	1.13	1.13	0.000	5342.10	0.05	0.05
349	2000056041500	504	2000056041529	Tariff 115	0	0.596	30.53	1.30	1.30	0.000	5342.10	0.05	0.05
885	2000055916254	624	2000055916263	Tariff 116	0	0.000	5.88	1.68	1.68	0.000	1765.38	0.05	0.05
886	2000055860113	625	2000055860122	Tariff 117	0	0.221	4.87	2.32	2.32	0.000	387.11	0.05	0.05
888	2000055899574	627	2000055899583	Tariff 119	0	0.221	3.30	1.31	1.31	0.000	626.47	0.05	0.05
889	2000055899529	628	2000055899538	Tariff 120	0	0.000	34.63	1.02	1.02	0.000	3647.98	0.05	0.05
890	2000056041556	629	2000056041565	Tariff 121	0	0.000	76.40	1.11	1.11	0.000	3865.03	0.05	0.05
834	SHP 1	914	SHP 2	Tariff 122	4	0.000	154381.86	3.01	3.01	0.000	1842.72	0.05	0.05
891	2000056235458			Tariff 123	2	0.000	15679.91	2.19	2.19	0.000	0.00	0.00	0.00
892	2000055582800	630	2000055582819	Tariff 124	0	0.000	2.51	2.12	2.12	0.000	627.26	0.05	0.05
893	2000056442147	631	2000056442156	Tariff 125	0	0.000	4.65	1.25	1.25	0.000	286.81	0.05	0.05
894	2000055894939	632	2000055894948	Tariff 126	0	0.000	2.32	2.14	2.14	0.000	627.45	0.05	0.05
895	2000055630116	633	2000055630125	Tariff 127	0	0.000	6.82	1.70	1.70	0.000	429.88	0.05	0.05
896	2000055845773	634	2000055845782	Tariff 128	0	1.198	3.69	1.18	1.18	0.000	433.02	0.05	0.05
720	2000055856970	635	2000055856989	Tariff 129	0	0.000	10.12	3.21	3.21	0.000	3035.38	0.05	0.05

Import LLFC / DUoS Tariff ID	Import MPANs/MSIDs	Export LLFC / DUoS Tariff ID	Export MPANs/MSIDs	Name	Residual Charging Band	Import Super Red unit charge (p/kWh)	Import fixed charge (p/day)	Import capacity charge (p/kVA/day)	Import exceeded capacity charge (p/kVA/day)	Export Super Red unit charge (p/kWh)	Export fixed charge (p/day)	Export capacity charge (p/kVA/day)	Export exceeded capacity charge (p/kVA/day)
848	2000056875315	648	2000056875324	Tariff 131	0	0.174	105.76	0.81	0.81	0.000	1399.68	0.05	0.05
724	2000055874997	639	2000055875003	Tariff 134	0	0.000	40.36	0.76	0.76	0.000	2368.02	0.05	0.05
725	2000055996659	640	2000055996668	Tariff 135	0	0.000	9.19	0.99	0.99	0.000	620.58	0.05	0.05
726	2000055627860	641	2000055627888	Tariff 136	0	0.593	7.49	1.06	1.06	0.000	429.21	0.05	0.05
727	2000055899788	642	2000055899797	Tariff 137	0	0.217	22.47	1.10	1.10	0.000	1370.51	0.05	0.05
831	2000055924005	645	2000055924014	Tariff 138	0	0.000	32.75	1.37	1.37	0.000	3012.75	0.05	0.05
832	2000055878690	646	2000055878705	Tariff 139	0	0.223	5.65	3.58	3.58	0.000	1450.38	0.05	0.05
Y00	2000056762133	Z00	2000056762142	Tariff 140	0	0.201	17.54	0.92	0.92	0.000	1753.73	0.05	0.05
850	2000055901285	649	2000055901300	Tariff 143	0	0.000	15.32	0.90	0.90	0.000	551.41	0.05	0.05
661	2000055901346	911	2000055901355	Tariff 144	0	0.000	9.69	1.01	1.01	0.000	620.08	0.05	0.05
662	2000055899389	912	2000055899398	Tariff 146	0	0.222	12.08	1.66	1.66	0.000	1932.76	0.05	0.05
452	2000056479100	952	2000056479110	Tariff 147	0	0.202	37.23	1.13	1.13	0.000	3308.98	0.05	0.05
663	2000055858718	913	2000055858727	Tariff 148	0	0.223	5.91	1.63	1.63	0.000	1301.29	0.05	0.05
Y29	2000056951250	Z29	2000056951269	Tariff 149	0	0.000	1295.04	0.76	0.76	0.000	11954.23	0.05	0.05
458	2000056277271	958	2000056277280	Tariff 151	0	0.000	18.23	1.37	1.37	0.000	611.54	0.05	0.05
596	2000056113290	626	2000056113323	Tariff 152	0	0.801	6.24	1.37	1.37	0.000	623.54	0.05	0.05
597	2000056188505	607	2000056212628	Tariff 153	0	0.000	6.85	1.59	1.59	0.000	622.92	0.05	0.05
665	2000055924023	915	2000055924032	Tariff 154	0	0.000	31.07	1.40	1.40	0.000	1740.19	0.05	0.05

Import LLFC / DUoS Tariff ID	Import MPANs/MSIDs	Export LLFC / DUoS Tariff ID	Export MPANs/MSIDs	Name	Residual Charging Band	Import Super Red unit charge (p/kWh)	Import fixed charge (p/day)	Import capacity charge (p/kVA/day)	Import exceeded capacity charge (p/kVA/day)	Export Super Red unit charge (p/kWh)	Export fixed charge (p/day)	Export capacity charge (p/kVA/day)	Export exceeded capacity charge (p/kVA/day)
598	2000056127229	608	2000056127292	Tariff 155	0	0.206	10.63	2.39	2.39	0.000	2359.92	0.05	0.05
459	2000056455252	959	2000056455270	Tariff 156	0	0.220	9.13	1.18	1.18	0.000	620.64	0.05	0.05
599	2000056021300	609	2000056021319	Tariff 158	0	0.222	77.40	1.42	1.42	0.000	7739.68	0.05	0.05
666	2000055815004	916	2000055815013	Tariff 160	0	0.220	42.32	1.21	1.21	0.000	2750.98	0.05	0.05
460	2000056244977	960	2000056244986	Tariff 161	0	0.214	16.36	0.88	0.88	0.000	613.41	0.05	0.05
650	2000056148799	600	2000056148804	Tariff 162	0	0.603	12.64	2.36	2.36	0.000	2528.47	0.05	0.05
651	2000056082126	601	2000056082135	Tariff 164	0	1.237	2.42	2.11	2.11	0.000	846.35	0.05	0.05
652	2000056194252	602	2000056194261	Tariff 165	0	0.000	22.23	0.99	0.99	0.000	733.64	0.05	0.05
667	2000055881610	647	2000055881629	Tariff 167	0	1.245	14.83	1.52	1.52	0.000	1756.43	0.05	0.05
465	2000056474803	954	2000056474812	Tariff 168	0	0.000	18.85	0.97	0.97	0.000	1885.15	0.05	0.05
653	2000056179477	603	2000056179495	Tariff 169	0	0.794	12.74	1.18	1.18	0.000	1121.41	0.05	0.05
654	2000056205295	604	2000056205310	Tariff 170	0	0.219	11.92	1.35	1.35	0.000	1852.25	0.05	0.05
656	2000056199942	636	2000056199951	Tariff 171	0	0.221	7.71	1.59	1.59	0.000	841.06	0.05	0.05
664	2000056063709	964	2000056063718	Tariff 173	0	0.000	35.73	1.07	1.07	0.000	2591.64	0.05	0.05
524	2000056300470	404	2000056300489	Tariff 174	0	0.000	2.52	1.78	1.78	0.000	627.25	0.05	0.05
675	2000055907808	945	2000055907817	Tariff 175	0	0.797	3.76	1.63	1.63	0.000	626.02	0.05	0.05
676	2000055904773	936	2000055904782	Tariff 176	0	0.000	6.92	1.50	1.50	0.000	622.85	0.05	0.05
681	2000055926119	781	2000055926128	Tariff 177	0	0.232	39.74	0.95	0.95	0.000	935.12	0.05	0.05

Import LLFC / DUoS Tariff ID	Import MPANs/MSIDs	Export LLFC / DUoS Tariff ID	Export MPANs/MSIDs	Name	Residual Charging Band	Import Super Red unit charge (p/kWh)	Import fixed charge (p/day)	Import capacity charge (p/kVA/day)	Import exceeded capacity charge (p/kVA/day)	Export Super Red unit charge (p/kWh)	Export fixed charge (p/day)	Export capacity charge (p/kVA/day)	Export exceeded capacity charge (p/kVA/day)
668	2000056199766	968	2000056199793	Tariff 178	1	0.220	2193.23	0.87	0.87	0.000	2367.49	0.05	0.05
670	2000056222885	970	2000056222894	Tariff 179	0	0.591	12.47	0.98	0.98	0.000	617.30	0.05	0.05
671	2000056002307	971	2000056002316	Tariff 180	0	0.000	20.54	1.43	1.43	0.000	4518.18	0.05	0.05
677	2000055904791	777	2000055904807	Tariff 181	0	0.000	9.31	0.91	0.91	0.000	620.46	0.05	0.05
678	2000055916272	778	2000055916281	Tariff 182	0	0.092	10.32	1.33	1.33	0.000	619.45	0.05	0.05
679	2000055891167	779	2000055891176	Tariff 184	0	0.604	20.12	1.43	1.43	0.000	2009.97	0.05	0.05
672	2000056147378	972	2000056147387	Tariff 185	0	0.000	8.76	4.21	4.21	0.000	3892.84	0.05	0.05
680	2000055908537	780	2000055908546	Tariff 186	0	0.000	4.15	1.10	1.10	0.000	432.55	0.05	0.05
674	2000056049271	974	2000056049280	Tariff 187	0	0.000	4.19	1.04	1.04	0.000	432.52	0.05	0.05
682	2000056049305	782	2000056049314	Tariff 188	0	0.000	4.40	1.11	1.11	0.000	432.30	0.05	0.05
Y01	2000056827906	Z01	2000056827915	Tariff 189	0	0.000	23.76	0.80	0.80	0.000	412.94	0.05	0.05
683	2000056169804	783	2000056169822	Tariff 190	0	0.602	6.18	1.96	1.96	0.000	1346.97	0.05	0.05
684	2000056179662	784	2000056179680	Tariff 191	0	0.000	8.02	1.42	1.42	0.000	750.86	0.05	0.05
685	2000056107107	785	2000056107125	Tariff 192	0	0.000	4.66	1.84	1.84	0.000	625.11	0.05	0.05
686	2000056113954	786	2000056113963	Tariff 194	0	0.220	5.71	1.96	1.96	0.000	624.06	0.05	0.05
687	2000056138132	787	2000056138160	Tariff 196	0	0.222	2.09	1.73	1.73	0.000	627.68	0.05	0.05
688	2000056167913	788	2000056167922	Tariff 198	0	0.602	0.91	2.70	2.70	0.000	435.79	0.05	0.05
525	2000056537756	956	2000056537783	Tariff 199	0	0.204	29.71	1.60	1.60	0.000	5249.00	0.05	0.05

Import LLFC / DUoS Tariff ID	Import MPANs/MSIDs	Export LLFC / DUoS Tariff ID	Export MPANs/MSIDs	Name	Residual Charging Band	Import Super Red unit charge (p/kWh)	Import fixed charge (p/day)	Import capacity charge (p/kVA/day)	Import exceeded capacity charge (p/kVA/day)	Export Super Red unit charge (p/kWh)	Export fixed charge (p/day)	Export capacity charge (p/kVA/day)	Export exceeded capacity charge (p/kVA/day)
689	2000055874960	789	2000055874979, 2000060638456	Tariff 201	2	0.000	13550.06	0.77	0.77	0.000	13213.94	0.05	0.05
690	2000056147225	790	2000056147261	Tariff 202	0	0.000	8.07	1.60	1.60	0.000	1345.08	0.05	0.05
691	2000055932200	791	2000055932238	Tariff 205	0	0.000	1.26	4.50	4.50	0.000	628.51	0.05	0.05
729	2000055373760, 2000055373779, 2000055373788, 2000055373797, 2000055373802, 2000055373811, 2000055373820, 2000055373830, 2000056698230, 2000056698240, 2000056698259, 2000056698268, 2000056698277, 2000056698286, 2000056793498, 2000056793503, 2000058020371			Tariff 206	4	0.774	171421.08	1.59	1.59	0.000	0.00	0.00	0.00
527	2000056441375	962	2000056441384	Tariff 208	0	0.000	6.91	0.95	0.95	0.000	748.95	0.05	0.05

Import LLFC / DUoS Tariff ID	Import MPANs/MSIDs	Export LLFC / DUoS Tariff ID	Export MPANs/MSIDs	Name	Residual Charging Band	Import Super Red unit charge (p/kWh)	Import fixed charge (p/day)	Import capacity charge (p/kVA/day)	Import exceeded capacity charge (p/kVA/day)	Export Super Red unit charge (p/kWh)	Export fixed charge (p/day)	Export capacity charge (p/kVA/day)	Export exceeded capacity charge (p/kVA/day)
692	2000056204956	792	2000056204965	Tariff 209	0	0.000	80.03	1.48	1.48	0.000	9336.60	0.05	0.05
528	2000056213152	618	2000056439613	Tariff 212	0	0.000	18.33	1.48	1.48	0.000	5787.35	0.05	0.05
693	2000056147396	793	2000056147401	Tariff 213	0	0.603	1.99	2.28	2.28	0.000	627.78	0.05	0.05
529	2000056359669	989	2000056359863	Tariff 214	0	0.000	32.47	1.50	1.50	0.000	4546.08	0.05	0.05
694	2000056202391	794	2000056202407	Tariff 215	0	0.792	25.42	1.02	1.02	0.000	2382.96	0.05	0.05
585	2000056452109	963	2000056452118	Tariff 218	0	0.221	11.64	1.34	1.34	0.000	870.33	0.05	0.05
695	2000056186400	795	2000056186438	Tariff 219	0	0.000	55.67	1.41	1.41	0.000	11438.20	0.05	0.05
696	2000056166440	796	2000056166469	Tariff 220	0	0.000	68.90	1.85	1.85	0.000	5511.78	0.05	0.05

Import LLFC / DUoS Tariff ID	Import MPANs/MSIDs	Export LLFC / DUoS Tariff ID	Export MPANs/MSIDs	Name	Residual Charging Band	Import Super Red unit charge (p/kWh)	Import fixed charge (p/day)	Import capacity charge (p/kVA/day)	Import exceeded capacity charge (p/kVA/day)	Export Super Red unit charge (p/kWh)	Export fixed charge (p/day)	Export capacity charge (p/kVA/day)	Export exceeded capacity charge (p/kVA/day)
Y02	2000056792652	Z02	2000056792661	Tariff 222	0	0.000	3.40	0.77	0.77	0.000	815.52	0.05	0.05
595	2000056384832	980	2000056384850	Tariff 225	1	0.000	2175.32	0.89	0.89	0.000	758.11	0.05	0.05
655	2000056536112	955	2000056536121	Tariff 227	0	0.000	17.18	1.14	1.14	0.000	3991.33	0.05	0.05
657	2000056456256	957	2000056456265	Tariff 228	0	0.000	39.70	0.80	0.80	0.000	397.00	0.05	0.05
659	2000056439998	999	2000056440006	Tariff 229	0	0.000	6.18	1.06	1.06	0.000	579.66	0.05	0.05
660	2000056420339	450	2000056420348	Tariff 230	0	0.787	10.95	1.53	1.53	0.000	744.91	0.05	0.05
697	2000056202416	797	2000056202425	Tariff 233	0	0.000	14.55	2.16	2.16	0.000	1119.60	0.05	0.05
Y49	2000060046760	Z49	2000060046797	Tariff 234	0	0.000	108.82	0.97	0.97	0.000	22634.10	0.05	0.05
669	2000056532456	369	2000056532483	Tariff 235	0	0.220	18.20	0.93	0.93	0.000	800.72	0.05	0.05
7311	7311	7310	7310	Tariff 238	0	0.664	119.00	0.95	0.95	0.000	1785.00	0.05	0.05
698	2000056199613	798	2000056199701	Tariff 240	0	0.000	133.43	0.80	0.80	0.000	1000.72	0.05	0.05
699	2000056191526	799	2000056191535	Tariff 244	0	0.000	42.79	2.38	2.38	0.000	12883.19	0.05	0.05
703	2000056580947, 2000056580956			Tariff 246	3	0.000	84546.41	1.32	1.32	0.000	0.00	0.00	0.00
730	2000056058754	741	2000056058763	Tariff 247	0	0.000	3.45	0.86	0.86	0.000	151.79	0.05	0.05
731	2000056151106	742	2000056151115	Tariff 248	1	0.000	2211.49	0.81	0.81	0.000	96.10	0.05	0.05
732	2000056098818	743	2000056098827	Tariff 249	0	0.000	3.04	0.97	0.97	0.000	152.20	0.05	0.05
673	2000056551324	403	2000056551333	Tariff 250	0	0.000	33.20	1.74	1.74	0.000	3984.43	0.05	0.05
721	2000056562292	451	2000056562317	Tariff 251	0	0.000	732.21	0.80	0.80	0.000	6135.96	0.05	0.05

Import LLFC / DUoS Tariff ID	Import MPANs/MSIDs	Export LLFC / DUoS Tariff ID	Export MPANs/MSIDs	Name	Residual Charging Band	Import Super Red unit charge (p/kWh)	Import fixed charge (p/day)	Import capacity charge (p/kVA/day)	Import exceeded capacity charge (p/kVA/day)	Export Super Red unit charge (p/kWh)	Export fixed charge (p/day)	Export capacity charge (p/kVA/day)	Export exceeded capacity charge (p/kVA/day)
728	2000056194191	978	2000056194207	Tariff 252	0	0.222	6.81	2.06	2.06	0.000	2620.57	0.05	0.05
901	2000056139215	991	2000056139224	Tariff 253	0	0.605	14.98	4.96	4.96	0.000	8489.11	0.05	0.05
904	2000056219952	994	2000056219980	Tariff 254	0	0.000	397.82	0.77	0.77	0.000	358.04	0.05	0.05
905	2000056200010	995	2000056200029	Tariff 255	0	0.798	5.24	1.82	1.82	0.000	750.63	0.05	0.05
906	2000056138977	996	2000056139001	Tariff 256	0	0.000	4.18	1.37	1.37	0.000	751.69	0.05	0.05
907	2000056212033	997	2000056212042	Tariff 257	0	0.000	66.05	0.84	0.84	0.000	1200.84	0.05	0.05
908	2000056139395	998	2000056139438	Tariff 258	0	1.235	30.60	1.80	1.80	0.000	13002.97	0.05	0.05
723	2000056530788	953	2000056530797	Tariff 260	0	0.000	191.30	1.10	1.10	0.000	23195.36	0.05	0.05
765	2000056469176	983	2000056469185	Tariff 262	0	0.089	27.66	0.89	0.89	0.000	1106.49	0.05	0.05
Y03	2000056842124	Z03	2000056842133	Tariff 264	0	0.222	3.23	2.67	2.67	0.000	752.64	0.05	0.05
7492	7492	7493	7493	Tariff 265	0	0.816	19.16	0.97	0.97	0.000	766.57	0.05	0.05
746	2000056488513	748	2000056488531	Tariff 269	0	0.000	1.65	1.31	1.31	0.000	880.31	0.05	0.05
Y05	2000056866055	Z05	2000056866064	Tariff 270	0	0.000	11.55	0.95	0.95	0.000	744.32	0.05	0.05
766	2000056537213	966	2000056537222	Tariff 275	0	0.793	25.92	1.12	1.12	0.000	2130.27	0.05	0.05
Y06	2000056521960	Z06	2000056522003	Tariff 276	0	0.851	18.30	1.41	1.41	0.000	418.40	0.05	0.05
Y26	2000056839896	Z26	2000056839901	Tariff 277	0	0.203	9.04	1.10	1.10	0.000	746.83	0.05	0.05
841	2000060018140	919	2000060018150	Tariff 279	0	0.785	40.15	1.30	1.30	0.000	1226.74	0.05	0.05
767	2000056535670	467	2000056535740	Tariff 280	0	0.000	6.26	1.20	1.20	0.000	938.75	0.05	0.05

Import LLFC / DUoS Tariff ID	Import MPANs/MSIDs	Export LLFC / DUoS Tariff ID	Export MPANs/MSIDs	Name	Residual Charging Band	Import Super Red unit charge (p/kWh)	Import fixed charge (p/day)	Import capacity charge (p/kVA/day)	Import exceeded capacity charge (p/kVA/day)	Export Super Red unit charge (p/kWh)	Export fixed charge (p/day)	Export capacity charge (p/kVA/day)	Export exceeded capacity charge (p/kVA/day)
768	2000056345452	468	2000056345461	Tariff 283	0	0.000	38.69	0.87	0.87	0.000	1354.29	0.05	0.05
Y07	2000056520910	Z07	2000056520957	Tariff 284	0	0.842	18.30	1.45	1.45	0.000	418.40	0.05	0.05
Y27	2000056860080	Z27	2000056860090	Tariff 286	0	0.980	31.38	1.14	1.14	0.000	1255.40	0.05	0.05
769	2000056495496, 2000056496295	984	2000056495501, 2000056496300	Tariff 291	0	0.220	6.15	0.92	0.92	0.000	430.55	0.05	0.05
Y08	2000056865497	Z08	2000056865479	Tariff 292	0	0.000	30.35	0.92	0.92	0.000	1103.80	0.05	0.05
771	2000056477646	951	2000056477682	Tariff 293	0	0.221	9.33	1.08	1.08	0.000	746.54	0.05	0.05
7490	7490	7491	7491	Tariff 294	0	0.000	27.66	0.95	0.95	0.000	1106.49	0.05	0.05
7496	7496	7497	7497	Tariff 295	0	0.000	60.96	0.98	0.98	0.000	2566.42	0.05	0.05
Y10	2000056474868	Z10	2000056474877	Tariff 296	0	0.000	38.14	1.22	1.22	0.000	4229.20	0.05	0.05
774	2000056474380	644	2000056474399	Tariff 300	0	0.000	2.17	1.63	1.63	0.000	434.53	0.05	0.05
Y11	2000056631430	Z11	2000056631440	Tariff 301	0	0.000	2.17	1.42	1.42	0.000	434.53	0.05	0.05
733	2000056705135	744	2000056705144	Tariff 304	0	0.000	70.29	1.68	1.68	0.000	3194.20	0.05	0.05
775	2000056366860	986	2000056366930	Tariff 305	0	0.000	14.82	1.44	1.44	0.000	741.05	0.05	0.05
Y12	2000056623634, 2000056638213	933		Tariff 306	3	0.227	30733.70	1.46	1.46	0.000	18.73	0.05	0.05
776	2000056563570	976	2000056563589	Tariff 311	0	0.772	46.97	0.78	0.78	0.000	708.89	0.05	0.05
Y13	2000056866037	Z13	2000056866046	Tariff 312	0	0.593	20.53	0.83	0.83	0.000	390.06	0.05	0.05

Import LLFC / DUoS Tariff ID	Import MPANs/MSIDs	Export LLFC / DUoS Tariff ID	Export MPANs/MSIDs	Name	Residual Charging Band	Import Super Red unit charge (p/kWh)	Import fixed charge (p/day)	Import capacity charge (p/kVA/day)	Import exceeded capacity charge (p/kVA/day)	Export Super Red unit charge (p/kWh)	Export fixed charge (p/day)	Export capacity charge (p/kVA/day)	Export exceeded capacity charge (p/kVA/day)
Y14	2000056848135	Z14	2000056848144	Tariff 316	0	0.000	7.04	1.26	1.26	0.000	1127.11	0.05	0.05
Y15	2000056774592	Z15	2000056774608	Tariff 320	0	0.219	8.96	0.86	0.86	0.000	746.90	0.05	0.05
Y16	2000056647928	Z16	2000056647946	Tariff 322	0	0.000	2.78	1.64	1.64	0.000	444.48	0.05	0.05
Y17	2000056456743	Z17	2000056456850	Tariff 329	0	0.000	39.70	0.79	0.79	0.000	397.00	0.05	0.05
Y18	2000056872183	Z18	2000056872305	Tariff 331	0	0.000	18.72	1.10	1.10	0.000	1871.51	0.05	0.05
Y50	2000060619240	Z50	2000060619259	Tariff 333	0	0.000	1.96	1.97	1.97	0.000	627.81	0.05	0.05
838	2000056479129	638	2000056479138	Tariff 339	0	0.000	68.62	0.94	0.94	0.000	2983.51	0.05	0.05
843	2000056465942	643	2000056465970	Tariff 340	0	0.000	6.04	1.06	1.06	0.000	462.63	0.05	0.05
871	2000056504928	981	2000056504937	Tariff 341	0	0.000	10.65	1.02	1.02	0.000	426.05	0.05	0.05
879	2000056522323	988	2000056522332	Tariff 342	0	0.000	15.96	1.14	1.14	0.000	1015.32	0.05	0.05
887	2000056527544	992	2000056527562	Tariff 343	0	0.222	50.96	2.53	2.53	0.000	10872.16	0.05	0.05
900	2000056873470	950	2000056873498	Tariff 344	0	0.130	13.22	0.78	0.78	0.000	1058.00	0.05	0.05
Y20	2000056873512	Z20	2000056873530	Tariff 346	0	0.766	35.77	1.39	1.39	0.000	1490.34	0.05	0.05
Y21	2000056644670	Z21	2000056644680	Tariff 347	0	0.000	4.65	1.25	1.25	0.000	286.81	0.05	0.05
Y45	2000060268250	Z45	2000060268260	Tariff 353	0	0.000	157.94	1.22	1.22	0.000	665.01	0.05	0.05
Y32	2000057382881	Z32	2000057382890	Tariff 354	0	0.000	4.72	2.10	2.10	0.000	363.92	0.05	0.05
Y38	2000057829816	Z36	2000057829825	Tariff 356	0	0.000	67.56	1.72	1.72	0.000	2702.50	0.05	0.05
7372	7372	7373	7373	Tariff 365	0	0.000	39.54	0.94	0.94	0.000	878.62	0.05	0.05

Import LLFC / DUoS Tariff ID	Import MPANs/MSIDs	Export LLFC / DUoS Tariff ID	Export MPANs/MSIDs	Name	Residual Charging Band	Import Super Red unit charge (p/kWh)	Import fixed charge (p/day)	Import capacity charge (p/kVA/day)	Import exceeded capacity charge (p/kVA/day)	Export Super Red unit charge (p/kWh)	Export fixed charge (p/day)	Export capacity charge (p/kVA/day)	Export exceeded capacity charge (p/kVA/day)
Y22	2000056721085	Z22	2000056721128	Tariff 374	0	0.000	17.88	0.90	0.90	0.000	429.08	0.05	0.05
Y23	2000056873489	Z23	2000056873503	Tariff 379	0	0.130	107.12	0.78	0.78	0.000	107.12	0.05	0.05
Y33	2000056970234	Z33	2000056970243	Tariff 381	0	0.096	18.51	0.93	0.93	0.000	445.33	0.05	0.05
Y46	2000060440639	Z46	2000060440648	Tariff 383	0	0.000	6325.31	1.11	1.11	0.000	6325.31	0.05	0.05
7459	7459	7460	7460	Tariff 385	0	0.000	490.75	0.89	0.89	0.000	490.75	0.05	0.05
Y24	2000056879230	Z24	2000056879240	Tariff 391	0	0.000	2.77	1.64	1.64	0.000	305.84	0.05	0.05
Y25	2000056873521	Z25	2000056873540	Tariff 392	0	0.735	183.13	1.30	1.30	0.000	183.13	0.05	0.05
Y34	2000057162785	Z34	2000057162794	Tariff 394	0	0.224	338.89	1.01	1.01	0.000	423.61	0.05	0.05
Y52	2000060717806	Z52	2000060717815	Tariff 395	0	0.000	48.99	1.35	1.35	0.000	4246.88	0.05	0.05
7615	7615	7616	7616	Tariff 402	0	0.000	443.14	0.85	0.85	0.000	443.14	0.05	0.05
821	2000057983865	Z37	2000057983847	Tariff 405	0	0.000	1102.26	0.61	0.61	0.000	1045.68	0.05	0.05
7515	7515	7516	7516	Tariff 413	0	0.878	762.69	1.36	1.36	0.000	802.84	0.05	0.05
Y35	2000057082465	Z35	2000057082474	Tariff 414	0	0.000	172.51	0.79	0.79	0.000	274.45	0.05	0.05
7527	7527	7528	7528	Tariff 415	0	0.000	849.13	0.84	0.84	0.000	849.13	0.05	0.05
Y28	2000057173796	Z28	2000056212186	Tariff 417	0	0.221	3.37	2.32	2.32	0.000	486.61	0.05	0.05
Y53	2000060744819	Z53	2000060744828	Tariff 431	0	0.000	1485.32	1.27	1.27	0.000	1563.48	0.05	0.05
897	-	933	-	Tariff 444	0	0.000	462.59	0.85	0.85	0.000	396.50	0.05	0.05
TBC	-	TBC	-	Tariff 445	0	0.000	2665.22	0.31	0.31	0.000	2665.22	0.05	0.05

Import LLFC / DUoS Tariff ID	Import MPANs/MSIDs	Export LLFC / DUoS Tariff ID	Export MPANs/MSIDs	Name	Residual Charging Band	Import Super Red unit charge (p/kWh)	Import fixed charge (p/day)	Import capacity charge (p/kVA/day)	Import exceeded capacity charge (p/kVA/day)	Export Super Red unit charge (p/kWh)	Export fixed charge (p/day)	Export capacity charge (p/kVA/day)	Export exceeded capacity charge (p/kVA/day)
745	2000054784320, 2000054784330			Tariff 453	4	0.219	157533.17	1.54	1.54	0.000	0.00	0.00	0.00
Y37	2000057337337			Tariff 455	2	0.000	34246.39	1.23	1.23	0.000	0.00	0.00	0.00
897	-			Tariff 460	4	0.503	134212.22	0.66	0.66	0.000	0.00	0.00	0.00
897	-			Tariff 461	4	0.000	135023.02	1.33	1.33	0.000	0.00	0.00	0.00
828	2000057906648	Z04	2000057906657	Tariff 462	0	0.601	2.32	1.57	1.57	0.000	634.09	0.05	0.05
Y19	2000060019376	402	2000060019385	Tariff 463	0	0.000	1411.43	0.78	0.78	0.000	1340.39	0.05	0.05
Y54		Z54		Tariff 467	0	0.599	57.56	1.28	1.28	0.000	461.09	0.05	0.05
Y55	2000060556184	Z55	2000060556209	Tariff 469	0	0.205	5.52	0.76	0.76	0.000	441.44	0.05	0.05
Y56	2000060720482	Z56	2000060720491	Tariff 471	0	0.000	2038.59	1.23	1.23	0.000	2038.59	0.05	0.05
Y57	2000060526677	Z57	2000060526686	Tariff 473	0	0.600	12.20	1.24	1.24	0.000	2761.19	0.05	0.05
Y36	2000056598002, 2000056598085, 2000057489980, 2000057489990	Z58	2000060314136	Tariff 474	4	0.000	169980.71	1.35	1.35	0.000	0.00	0.00	0.00
Y59		Z59		Tariff 475	0	0.000	45.59	1.81	1.81	0.000	4558.88	0.05	0.05
739				Tariff 478	2	1.450	10901.42	2.69	2.69	0.000	0.00	0.00	0.00
739				Tariff 479	2	0.000	10820.38	3.30	3.30	0.000	0.00	0.00	0.00
770	2000057985393	610	2000057985409	Tariff 480	0	0.000	1063.55	0.85	0.85	0.000	1063.55	0.05	0.05
822	2000060051333	Z30	2000060051342	Tariff 481	0	0.000	1241.46	0.78	0.78	0.000	1179.54	0.05	0.05

Import LLFC / DUoS Tariff ID	Import MPANs/MSIDs	Export LLFC / DUoS Tariff ID	Export MPANs/MSIDs	Name	Residual Charging Band	Import Super Red unit charge (p/kWh)	Import fixed charge (p/day)	Import capacity charge (p/kVA/day)	Import exceeded capacity charge (p/kVA/day)	Export Super Red unit charge (p/kWh)	Export fixed charge (p/day)	Export capacity charge (p/kVA/day)	Export exceeded capacity charge (p/kVA/day)
Y04	2000060014536, 2000060068504			Tariff 482	2	1.252	18443.98	0.83	0.83	0.000	0.00	0.00	0.00
Y09	2000060085722	Z09	2000060085731	Tariff 483	0	0.000	1904.81	0.77	0.77	0.000	9524.04	0.05	0.05
Y39	2000056872582	Z38	2000056872607	Tariff 484	0	0.000	2.57	1.53	1.53	0.000	203.60	0.05	0.05
Y40	2000060045056	Z39	2000060045126	Tariff 485	0	0.000	2.58	1.27	1.27	0.000	238.21	0.05	0.05
899				Tariff 487	4	0.000	140937.52	0.35	0.35	0.000	0.00	0.00	0.00
Y30	2000060144110	948	2000060144129	Tariff 490	0	0.000	0.97	2.68	2.68	0.000	754.90	0.05	0.05
869	2000060138082	Z42	2000060138091	Tariff 491	0	0.000	8742.09	0.77	0.77	0.000	17484.19	0.05	0.05
Z40	2000060129343	Z43	2000060129352	Tariff 492	0	0.804	10.93	1.15	1.15	0.000	874.35	0.05	0.05
Z41	2000060127114	Z44	2000060127123	Tariff 493	0	0.000	340.77	0.84	0.84	0.000	358.69	0.05	0.05
Y47	2000060253227	Z47	2000060253236	Tariff 494	0	0.000	459.30	0.84	0.84	0.000	483.49	0.05	0.05
7529	7529	7530	7530	Tariff 495	0	0.000	3584.16	0.83	0.83	0.000	3584.16	0.05	0.05
Y61	2000060330778	Z61	2000060330787	Tariff 496	0	0.090	54.33	0.97	0.97	0.000	10722.86	0.05	0.05
897		933		Tariff 497	0	0.000	350.24	1.30	1.30	0.000	350.24	0.05	0.05
Y62				Tariff 498	3	0.000	31255.49	3.06	3.06	0.000	0.00	0.00	0.00
Y64	2000060564983	Z64	2000060564992	Tariff 500	0	0.000	5.23	0.76	0.76	0.000	753.65	0.05	0.05
Y48	2000060125845	Z48	2000060125854	Tariff 501	0	0.000	47.00	0.87	0.87	0.000	477.44	0.05	0.05
842	2000060129325	920	2000060129334	Tariff 502	0	0.000	1102.26	0.65	0.65	0.000	1045.68	0.05	0.05
861	2000060380148			Tariff 503	0	0.000	155.24	0.98	0.98	0.000	0.00	0.00	0.00

Import LLFC / DUoS Tariff ID	Import MPANs/MSIDs	Export LLFC / DUoS Tariff ID	Export MPANs/MSIDs	Name	Residual Charging Band	Import Super Red unit charge (p/kWh)	Import fixed charge (p/day)	Import capacity charge (p/kVA/day)	Import exceeded capacity charge (p/kVA/day)	Export Super Red unit charge (p/kWh)	Export fixed charge (p/day)	Export capacity charge (p/kVA/day)	Export exceeded capacity charge (p/kVA/day)
861	2000060380157			Tariff 504	0	0.000	155.24	0.98	0.98	0.000	0.00	0.00	0.00
Y65	2000060633963	Z65	2000060633972	Tariff 505	0	0.205	0.80	0.76	0.76	0.000	152.46	0.05	0.05
Y66	2000060635232	Z66	2000060635241	Tariff 506	0	0.794	38.22	1.27	1.27	0.000	1787.96	0.05	0.05
Y67	2000060637337	Z67	2000060637346	Tariff 507	0	0.223	261.54	0.76	0.76	0.000	682.65	0.05	0.05
739				Tariff 508	2	0.818	12117.39	2.33	2.33	0.000	0.00	0.00	0.00
739				Tariff 510	2	0.092	10970.24	1.46	1.46	0.000	0.00	0.00	0.00
Y68		Z68		Tariff 512	0	0.220	177.71	1.27	1.27	0.000	16232.83	0.05	0.05
		Z69		Tariff 513	0	0.000	0.00	0.00	0.00	0.000	345.12	0.05	0.05
Y70		Z70		Tariff 515	0	0.000	2201.81	0.61	0.61	0.000	2094.06	0.05	0.05
739				Tariff 516	2	1.246	10891.91	1.10	1.10	0.000	0.00	0.00	0.00
739				Tariff 517	1	0.635	1948.84	1.43	1.43	0.000	0.00	0.00	0.00
Y71	2000060759833	Z71	2000060759842	Tariff 518	0	0.000	1217.61	1.19	1.19	0.000	1281.70	0.05	0.05
Y72	2000060717531	Z72	2000060717540	Tariff 519	0	0.000	2337.08	0.83	0.83	0.000	2337.08	0.05	0.05
Y73	2000060864732	Z73	2000060864741	Tariff 520	0	0.000	2020.69	1.79	1.79	0.000	2653.47	0.05	0.05
Y74	2000060759851	Z74	2000060759860	Tariff 521	0	0.000	1217.61	1.19	1.19	0.000	1281.70	0.05	0.05
Y75	2000060973334, 2000060973343			Tariff 522	3	0.455	35636.56	1.68	1.68	0.000	0.00	0.00	0.00
Y76		Z75		Tariff 523	0	0.000	979.53	0.78	0.78	0.000	4402.75	0.05	0.05
TBC		TBC		Tariff 524	0	0.220	66.81	1.91	1.91	0.000	14068.43	0.05	0.05

Import LLFC / DUoS Tariff ID	Import MPANs/MSIDs	Export LLFC / DUoS Tariff ID	Export MPANs/MSIDs	Name	Residual Charging Band	Import Super Red unit charge (p/kWh)	Import fixed charge (p/day)	Import capacity charge (p/kVA/day)	Import exceeded capacity charge (p/kVA/day)	Export Super Red unit charge (p/kWh)	Export fixed charge (p/day)	Export capacity charge (p/kVA/day)	Export exceeded capacity charge (p/kVA/day)
TBC		TBC		Tariff 525	0	0.000	45.89	1.20	1.20	0.000	4628.27	0.05	0.05
TBC		TBC		Tariff 526	0	0.599	7322.61	1.27	1.27	0.000	7692.55	0.05	0.05
TBC		TBC		Tariff 527	0	0.599	659.30	1.92	1.92	0.000	865.76	0.05	0.05
TBC		TBC		Tariff 528	0	0.000	2.26	1.27	1.27	0.000	715.10	0.05	0.05
TBC		TBC		Tariff 529	0	0.000	431.67	0.85	0.85	0.000	431.69	0.05	0.05
TBC				Tariff 530	3	0.000	37052.92	3.28	3.28	0.000	0.00	0.00	0.00
TBC		TBC		Tariff 531	0	0.794	36.81	1.28	1.28	0.000	6199.05	0.05	0.05
TBC		TBC		Tariff 532	0	0.000	150.62	1.40	1.40	0.000	10273.49	0.05	0.05
TBC		TBC		Tariff 533	0	0.220	50.37	1.99	1.99	0.000	5302.34	0.05	0.05
TBC		TBC		Tariff 534	0	0.794	38.72	1.28	1.28	0.000	5434.18	0.05	0.05
TBC	2000060820841	TBC	2000060820850	Tariff 535	0	0.000	25.24	1.20	1.20	0.000	5047.12	0.05	0.05
TBC				Tariff 536	4	0.000	144728.94	0.84	0.84	0.000	0.00	0.00	0.00
TBC		TBC		Tariff 537	0	0.000	4.11	1.22	1.22	0.000	1730.04	0.05	0.05
TBC		TBC		Tariff 538	0	0.000	4.23	1.22	1.22	0.000	4448.93	0.05	0.05
TBC		TBC		Tariff 539	0	0.000	1259.38	1.27	1.27	0.000	1259.38	0.05	0.05
TBC		TBC		Tariff 540	0	0.000	57.85	1.35	1.35	0.000	5014.51	0.05	0.05
TBC	2000060575052	TBC	2000060575061	Tariff 541	0	0.000	4559.46	1.36	1.36	0.000	4799.40	0.05	0.05

Annex 3 - Schedule of Charges for use of the Distribution System by Preserved/Additional LLF Classes

Southern Electric Power Distribution plc - Effective from 1st April 2027 - Final LV and HV tariffs									
Supercustomer preserved charges / additional LLFCs / DUoS Tariff IDs									
	Closed LLFCs / DUoS Tariff IDs	**PCs**	**Red/black unit charge p/kWh**	**Amber/yellow unit charge p/kWh**	**Green unit charge p/kWh**	**Fixed charge p/MPAN/day**			
Domestic Aggregated or CT with Residual	124-125	0, 1, 2	12.981	2.124	0.155	11.04			
Domestic Aggregated (Related MPAN)	112-114, 116-120, 122-123	2	12.981	2.124	0.155				
Non-Domestic Aggregated or CT No Residual	Q35, Q40	0, 3, 4, 5-8	12.515	2.048	0.149	14.30			
Non-Domestic Aggregated or CT Band 1	Q36, Q41	0, 3, 4, 5-8	12.515	2.048	0.149	14.19			
Non-Domestic Aggregated or CT Band 2	Q37, Q42	0, 3, 4, 5-8	12.515	2.048	0.149	13.64			
Non-Domestic Aggregated or CT Band 3	Q38, Q43	0, 3, 4, 5-8	12.515	2.048	0.149	12.64			
Non-Domestic Aggregated or CT Band 4	Q39, Q44	0, 3, 4, 5-8	12.515	2.048	0.149	9.45			
Non-Domestic Aggregated (related MPAN)	138-139, 141-143, 145	4	12.515	2.048	0.149				
Notes:	Unit time periods are as specified in Annex 1.								

Site Specific preserved charges / additional LLFCs / DUoS Tariff IDs									
	Closed LLFCs / DUoS Tariff IDs	**PCs**	**Red/black unit charge p/kWh**	**Amber/yellow unit charge p/kWh**	**Green unit charge p/kWh**	**Fixed charge p/MPAN/day**	**Capacity charge p/kVA/day**	**Exceeded capacity charge p/kVA/day**	**Reactive power charge p/kVArh**
		0							

Annex 4 - Charges applied to LDNOs with HV/LV end-users

Southern Electric Power Distribution plc - Effective from 1st April 2027 - Final LDNO tariffs

Time Bands for LV and HV Designated Properties			
Time periods	**Red Time Band**	**Amber Time Band**	**Green Time Band**
Monday to Friday (Including Bank Holidays) All Year	16:30 - 19:30		
Monday to Friday (Including Bank Holidays) All Year		07:00 - 16:30 19:30 - 22:00	
Monday to Friday (Including Bank Holidays) All Year			00:00 - 07:00 22:00 - 24:00
Saturday and Sunday All Year		09:30 - 21:30	00:00 - 09:30 21:30 - 24:00
Notes	All the above times are in UK Clock time		

Time Bands for Unmetered Properties			
	Black Time Band	**Yellow Time Band**	**Green Time Band**
Monday to Friday (Including Bank Holidays) March to October Inclusive		07:00 - 22:00	
Monday to Friday (Including Bank Holidays) November to February Inclusive	16:30 - 19:30	07:00 - 16:30 19:30 - 22:00	
Monday to Friday (Including Bank Holidays) April to March Inclusive			00:00 - 07:00 22:00 - 24:00
Saturday and Sunday All Year		09:30 - 21:30	00:00 - 09:30 21:30 - 24:00
Notes	All the above times are in UK Clock time		

Tariff name	Unique billing identifier	PCs	Red/black unit charge p/kWh	Amber/yellow unit charge p/kWh	Green unit charge p/kWh	Fixed charge p/MPAN/day	Capacity charge p/kVA/day	Exceeded capacity charge p/kVA/day	Reactive power charge p/kVArh
LDNO LV: Domestic Aggregated or CT with Residual		**0, 1, 2**	**7.940**	**1.299**	**0.095**	**6.75**			
LDNO LV: Domestic Aggregated (related MPAN)		**2**	**7.940**	**1.299**	**0.095**				

Tariff name	Unique billing identifier	PCs	Red/black unit charge p/kWh	Amber/yellow unit charge p/kWh	Green unit charge p/kWh	Fixed charge p/MPAN/day	Capacity charge p/kVA/day	Exceeded capacity charge p/kVA/day	Reactive power charge p/kVArh
LDNO LV: Non-Domestic Aggregated or CT No Residual		0, 3, 4, 5-8	7.655	1.253	0.091	8.75			
LDNO LV: Non-Domestic Aggregated or CT Band 1		0, 3, 4, 5-8	7.655	1.253	0.091	8.68			
LDNO LV: Non-Domestic Aggregated or CT Band 2		0, 3, 4, 5-8	7.655	1.253	0.091	8.34			
LDNO LV: Non-Domestic Aggregated or CT Band 3		0, 3, 4, 5-8	7.655	1.253	0.091	7.73			
LDNO LV: Non-Domestic Aggregated or CT Band 4		0, 3, 4, 5-8	7.655	1.253	0.091	5.78			
LDNO LV: Non-Domestic Aggregated (related MPAN)		4	7.655	1.253	0.091				
LDNO LV: LV Site Specific No Residual		0	5.229	0.756	0.052	15.44	6.89	6.89	0.163
LDNO LV: LV Site Specific Band 1		0	5.229	0.756	0.052	10.35	6.89	6.89	0.163
LDNO LV: LV Site Specific Band 2		0	5.229	0.756	0.052	7.11	6.89	6.89	0.163
LDNO LV: LV Site Specific Band 3		0	5.229	0.756	0.052	0.84	6.89	6.89	0.163
LDNO LV: LV Site Specific Band 4		0	5.218	0.746	0.041	0.00	6.89	6.89	0.163
LDNO LV: Unmetered Supplies		0, 1 or 8	20.983	3.283	1.959				
LDNO LV: LV Generation Aggregated		0 or 8	-8.138	-1.332	-0.097	0.00			

Tariff name	Unique billing identifier	PCs	Red/black unit charge p/kWh	Amber/yellow unit charge p/kWh	Green unit charge p/kWh	Fixed charge p/MPAN/day	Capacity charge p/kVA/day	Exceeded capacity charge p/kVA/day	Reactive power charge p/kVArh
LDNO LV: LV Generation Site Specific		0	-8.138	-1.332	-0.097	0.00			0.331
LDNO HV: Domestic Aggregated or CT with Residual		0, 1, 2	5.758	0.942	0.069	4.90			
LDNO HV: Domestic Aggregated (Related MPAN)		2	5.758	0.942	0.069				
LDNO HV: Non-Domestic Aggregated or CT No Residual		0, 3, 4, 5-8	5.551	0.909	0.066	6.34			
LDNO HV: Non-Domestic Aggregated or CT Band 1		0, 3, 4, 5-8	5.551	0.909	0.066	6.29			
LDNO HV: Non-Domestic Aggregated or CT Band 2		0, 3, 4, 5-8	5.551	0.909	0.066	6.05			
LDNO HV: Non-Domestic Aggregated or CT Band 3		0, 3, 4, 5-8	5.551	0.909	0.066	5.61			
LDNO HV: Non-Domestic Aggregated or CT Band 4		0, 3, 4, 5-8	5.551	0.909	0.066	4.19			
LDNO HV: Non-Domestic Aggregated (related MPAN)		4	5.551	0.909	0.066				
LDNO HV: LV Site Specific No Residual		0	3.792	0.549	0.038	11.20	5.00	5.00	0.118
LDNO HV: LV Site Specific Band 1		0	3.792	0.549	0.038	7.51	5.00	5.00	0.118
LDNO HV: LV Site Specific Band 2		0	3.792	0.549	0.038	5.16	5.00	5.00	0.118
LDNO HV: LV Site Specific Band 3		0	3.792	0.549	0.038	0.61	5.00	5.00	0.118

Tariff name	Unique billing identifier	PCs	Red/black unit charge p/kWh	Amber/yellow unit charge p/kWh	Green unit charge p/kWh	Fixed charge p/MPAN/day	Capacity charge p/kVA/day	Exceeded capacity charge p/kVA/day	Reactive power charge p/kVArh
LDNO HV: LV Site Specific Band 4		0	3.784	0.541	0.030	0.00	5.00	5.00	0.118
LDNO HV: LV Sub Site Specific No Residual		0	3.500	0.385	0.022	42.89	8.45	8.45	0.107
LDNO HV: LV Sub Site Specific Band 1		0	3.500	0.385	0.022	36.74	8.45	8.45	0.107
LDNO HV: LV Sub Site Specific Band 2		0	3.500	0.385	0.022	32.82	8.45	8.45	0.107
LDNO HV: LV Sub Site Specific Band 3		0	3.500	0.385	0.022	25.25	8.45	8.45	0.107
LDNO HV: LV Sub Site Specific Band 4		0	3.487	0.372	0.009	24.22	8.45	8.45	0.107
LDNO HV: HV Site Specific No Residual		0	3.165	0.323	0.018	204.38	9.34	9.34	0.088
LDNO HV: HV Site Specific Band 1		0	3.165	0.323	0.018	158.98	9.34	9.34	0.088
LDNO HV: HV Site Specific Band 2		0	3.165	0.323	0.018	91.86	9.34	9.34	0.088
LDNO HV: HV Site Specific Band 3		0	3.164	0.322	0.017	0.00	9.34	9.34	0.088
LDNO HV: HV Site Specific Band 4		0	3.150	0.307	0.002	0.00	9.34	9.34	0.088
LDNO HV: Unmetered Supplies		0, 1 or 8	15.217	2.381	1.421				
LDNO HV: LV Generation Aggregated		0 or 8	-8.138	-1.332	-0.097	0.00			

Tariff name	Unique billing identifier	PCs	Red/black unit charge p/kWh	Amber/yellow unit charge p/kWh	Green unit charge p/kWh	Fixed charge p/MPAN/day	Capacity charge p/kVA/day	Exceeded capacity charge p/kVA/day	Reactive power charge p/kVArh
LDNO HV: LV Sub Generation Aggregated		0 or 8	-6.914	-1.043	-0.073	0.00			
LDNO HV: LV Generation Site Specific		0	-8.138	-1.332	-0.097	0.00			0.331
LDNO HV: LV Sub Generation Site Specific		0	-6.914	-1.043	-0.073	0.00			0.244
LDNO HV: HV Generation Site Specific		0	-4.793	-0.527	-0.031	0.00			0.200

Tariff name	Unique billing identifier	PCs	Red/black unit charge p/kWh	Amber/yellow unit charge p/kWh	Green unit charge p/kWh	Fixed charge p/MPAN/day	Capacity charge p/kVA/day	Exceeded capacity charge p/kVA/day	Reactive power charge p/kVArh
LDNO HVplus: Domestic Aggregated or CT with Residual		0, 1, 2	4.210	0.689	0.050	3.58			
LDNO HVplus: Domestic Aggregated (related MPAN)		2	4.210	0.689	0.050				
LDNO HVplus: Non-Domestic Aggregated or CT No Residual		0, 3, 4, 5-8	4.059	0.664	0.048	4.64			
LDNO HVplus: Non-Domestic Aggregated or CT Band 1		0, 3, 4, 5-8	4.059	0.664	0.048	4.60			
LDNO HVplus: Non-Domestic Aggregated or CT Band 2		0, 3, 4, 5-8	4.059	0.664	0.048	4.43			
LDNO HVplus: Non-Domestic Aggregated or CT Band 3		0, 3, 4, 5-8	4.059	0.664	0.048	4.10			
LDNO HVplus: Non-Domestic Aggregated or CT Band 4		0, 3, 4, 5-8	4.059	0.664	0.048	3.07			

Tariff name	Unique billing identifier	PCs	Red/black unit charge p/kWh	Amber/yellow unit charge p/kWh	Green unit charge p/kWh	Fixed charge p/MPAN/day	Capacity charge p/kVA/day	Exceeded capacity charge p/kVA/day	Reactive power charge p/kVArh
LDNO HVplus: Non-Domestic Aggregated (related MPAN)		4	4.059	0.664	0.048				
LDNO HVplus: LV Site Specific No Residual		0	2.773	0.401	0.028	8.19	3.65	3.65	0.087
LDNO HVplus: LV Site Specific Band 1		0	2.773	0.401	0.028	5.49	3.65	3.65	0.087
LDNO HVplus: LV Site Specific Band 2		0	2.773	0.401	0.028	3.77	3.65	3.65	0.087
LDNO HVplus: LV Site Specific Band 3		0	2.773	0.401	0.028	0.45	3.65	3.65	0.087
LDNO HVplus: LV Site Specific Band 4		0	2.767	0.395	0.022	0.00	3.65	3.65	0.087
LDNO HVplus: LV Sub Site Specific No Residual		0	2.498	0.275	0.016	30.61	6.03	6.03	0.076
LDNO HVplus: LV Sub Site Specific Band 1		0	2.498	0.275	0.016	26.22	6.03	6.03	0.076
LDNO HVplus: LV Sub Site Specific Band 2		0	2.498	0.275	0.016	23.42	6.03	6.03	0.076
LDNO HVplus: LV Sub Site Specific Band 3		0	2.498	0.275	0.016	18.02	6.03	6.03	0.076
LDNO HVplus: LV Sub Site Specific Band 4		0	2.489	0.265	0.007	17.29	6.03	6.03	0.076
LDNO HVplus: HV Site Specific No Residual		0	2.235	0.228	0.013	144.30	6.59	6.59	0.062
LDNO HVplus: HV Site Specific Band 1		0	2.235	0.228	0.013	112.25	6.59	6.59	0.062

Tariff name	Unique billing identifier	PCs	Red/black unit charge p/kWh	Amber/yellow unit charge p/kWh	Green unit charge p/kWh	Fixed charge p/MPAN/day	Capacity charge p/kVA/day	Exceeded capacity charge p/kVA/day	Reactive power charge p/kVArh
LDNO HVplus: HV Site Specific Band 2		0	2.235	0.228	0.013	64.86	6.59	6.59	0.062
LDNO HVplus: HV Site Specific Band 3		0	2.234	0.227	0.012	0.00	6.59	6.59	0.062
LDNO HVplus: HV Site Specific Band 4		0	2.224	0.217	0.002	0.00	6.59	6.59	0.062
LDNO HVplus: Unmetered Supplies		0, 1 or 8	11.127	1.741	1.039				
LDNO HVplus: LV Generation Aggregated		0 or 8	-4.294	-0.703	-0.051	0.00			
LDNO HVplus: LV Sub Generation Aggregated		0 or 8	-4.128	-0.622	-0.044	0.00			
LDNO HVplus: LV Generation Site Specific		0	-4.294	-0.703	-0.051	0.00			0.175
LDNO HVplus: LV Sub Generation Site Specific		0	-4.128	-0.622	-0.044	0.00			0.146
LDNO HVplus: HV Generation Site Specific		0	-4.793	-0.527	-0.031	466.72			0.200
LDNO EHV: Domestic Aggregated or CT with Residual		0, 1, 2	3.266	0.534	0.039	2.78			
LDNO EHV: Domestic Aggregated (related MPAN)		2	3.266	0.534	0.039				
LDNO EHV: Non-Domestic Aggregated or CT No Residual		0, 3, 4, 5-8	3.148	0.515	0.038	3.60			
LDNO EHV: Non-Domestic Aggregated or CT Band 1		0, 3, 4, 5-8	3.148	0.515	0.038	3.57			

Tariff name	Unique billing identifier	PCs	Red/black unit charge p/kWh	Amber/yellow unit charge p/kWh	Green unit charge p/kWh	Fixed charge p/MPAN/day	Capacity charge p/kVA/day	Exceeded capacity charge p/kVA/day	Reactive power charge p/kVArh
LDNO EHV: Non-Domestic Aggregated or CT Band 2		0, 3, 4, 5-8	3.148	0.515	0.038	3.43			
LDNO EHV: Non-Domestic Aggregated or CT Band 3		0, 3, 4, 5-8	3.148	0.515	0.038	3.18			
LDNO EHV: Non-Domestic Aggregated or CT Band 4		0, 3, 4, 5-8	3.148	0.515	0.038	2.38			
LDNO EHV: Non-Domestic Aggregated (related MPAN)		4	3.148	0.515	0.038				
LDNO EHV: LV Site Specific No Residual		0	2.150	0.311	0.021	6.35	2.83	2.83	0.067
LDNO EHV: LV Site Specific Band 1		0	2.150	0.311	0.021	4.26	2.83	2.83	0.067
LDNO EHV: LV Site Specific Band 2		0	2.150	0.311	0.021	2.93	2.83	2.83	0.067
LDNO EHV: LV Site Specific Band 3		0	2.150	0.311	0.021	0.35	2.83	2.83	0.067
LDNO EHV: LV Site Specific Band 4		0	2.146	0.307	0.017	0.00	2.83	2.83	0.067
LDNO EHV: LV Sub Site Specific No Residual		0	1.937	0.213	0.012	23.74	4.68	4.68	0.059
LDNO EHV: LV Sub Site Specific Band 1		0	1.937	0.213	0.012	20.33	4.68	4.68	0.059
LDNO EHV: LV Sub Site Specific Band 2		0	1.937	0.213	0.012	18.17	4.68	4.68	0.059
LDNO EHV: LV Sub Site Specific Band 3		0	1.937	0.213	0.012	13.97	4.68	4.68	0.059

Tariff name	Unique billing identifier	PCs	Red/black unit charge p/kWh	Amber/yellow unit charge p/kWh	Green unit charge p/kWh	Fixed charge p/MPAN/day	Capacity charge p/kVA/day	Exceeded capacity charge p/kVA/day	Reactive power charge p/kVArh
LDNO EHV: LV Sub Site Specific Band 4		0	1.930	0.206	0.005	13.41	4.68	4.68	0.059
LDNO EHV: HV Site Specific No Residual		0	1.733	0.177	0.010	111.92	5.11	5.11	0.048
LDNO EHV: HV Site Specific Band 1		0	1.733	0.177	0.010	87.06	5.11	5.11	0.048
LDNO EHV: HV Site Specific Band 2		0	1.733	0.177	0.010	50.31	5.11	5.11	0.048
LDNO EHV: HV Site Specific Band 3		0	1.733	0.176	0.009	0.00	5.11	5.11	0.048
LDNO EHV: HV Site Specific Band 4		0	1.725	0.168	0.001	0.00	5.11	5.11	0.048
LDNO EHV: Unmetered Supplies		0, 1 or 8	8.630	1.350	0.806				
LDNO EHV: LV Generation Aggregated		0 or 8	-3.330	-0.545	-0.040	0.00			
LDNO EHV: LV Sub Generation Aggregated		0 or 8	-3.202	-0.483	-0.034	0.00			
LDNO EHV: LV Generation Site Specific		0	-3.330	-0.545	-0.040	0.00			0.136
LDNO EHV: LV Sub Generation Site Specific		0	-3.202	-0.483	-0.034	0.00			0.113
LDNO EHV: HV Generation Site Specific		0	-3.717	-0.409	-0.024	361.98			0.155
LDNO 132kV/EHV: Domestic Aggregated or CT with Residual		0, 1, 2	2.441	0.399	0.029	2.08			

Tariff name	Unique billing identifier	PCs	Red/black unit charge p/kWh	Amber/yellow unit charge p/kWh	Green unit charge p/kWh	Fixed charge p/MPAN/day	Capacity charge p/kVA/day	Exceeded capacity charge p/kVA/day	Reactive power charge p/kVArh
LDNO 132kV/EHV: Domestic Aggregated (related MPAN)		2	2.441	0.399	0.029				
LDNO 132kV/EHV: Non-Domestic Aggregated or CT No Residual		0, 3, 4, 5-8	2.353	0.385	0.028	2.69			
LDNO 132kV/EHV: Non-Domestic Aggregated or CT Band 1		0, 3, 4, 5-8	2.353	0.385	0.028	2.67			
LDNO 132kV/EHV: Non-Domestic Aggregated or CT Band 2		0, 3, 4, 5-8	2.353	0.385	0.028	2.57			
LDNO 132kV/EHV: Non-Domestic Aggregated or CT Band 3		0, 3, 4, 5-8	2.353	0.385	0.028	2.38			
LDNO 132kV/EHV: Non-Domestic Aggregated or CT Band 4		0, 3, 4, 5-8	2.353	0.385	0.028	1.78			
LDNO 132kV/EHV: Non-Domestic Aggregated (related MPAN)		4	2.353	0.385	0.028				
LDNO 132kV/EHV: LV Site Specific No Residual		0	1.607	0.233	0.016	4.75	2.12	2.12	0.050
LDNO 132kV/EHV: LV Site Specific Band 1		0	1.607	0.233	0.016	3.18	2.12	2.12	0.050
LDNO 132kV/EHV: LV Site Specific Band 2		0	1.607	0.233	0.016	2.19	2.12	2.12	0.050
LDNO 132kV/EHV: LV Site Specific Band 3		0	1.607	0.233	0.016	0.26	2.12	2.12	0.050
LDNO 132kV/EHV: LV Site Specific Band 4		0	1.604	0.229	0.013	0.00	2.12	2.12	0.050
LDNO 132kV/EHV: LV Sub Site Specific No Residual		0	1.448	0.159	0.009	17.74	3.50	3.50	0.044

Tariff name	Unique billing identifier	PCs	Red/black unit charge p/kWh	Amber/yellow unit charge p/kWh	Green unit charge p/kWh	Fixed charge p/MPAN/day	Capacity charge p/kVA/day	Exceeded capacity charge p/kVA/day	Reactive power charge p/kVArh
LDNO 132kV/EHV: LV Sub Site Specific Band 1		0	1.448	0.159	0.009	15.20	3.50	3.50	0.044
LDNO 132kV/EHV: LV Sub Site Specific Band 2		0	1.448	0.159	0.009	13.58	3.50	3.50	0.044
LDNO 132kV/EHV: LV Sub Site Specific Band 3		0	1.448	0.159	0.009	10.44	3.50	3.50	0.044
LDNO 132kV/EHV: LV Sub Site Specific Band 4		0	1.443	0.154	0.004	10.02	3.50	3.50	0.044
LDNO 132kV/EHV: HV Site Specific No Residual		0	1.296	0.132	0.007	83.65	3.82	3.82	0.036
LDNO 132kV/EHV: HV Site Specific Band 1		0	1.296	0.132	0.007	65.07	3.82	3.82	0.036
LDNO 132kV/EHV: HV Site Specific Band 2		0	1.296	0.132	0.007	37.60	3.82	3.82	0.036
LDNO 132kV/EHV: HV Site Specific Band 3		0	1.295	0.132	0.007	0.00	3.82	3.82	0.036
LDNO 132kV/EHV: HV Site Specific Band 4		0	1.289	0.126	0.001	0.00	3.82	3.82	0.036
LDNO 132kV/EHV: Unmetered Supplies		0, 1 or 8	6.450	1.009	0.602				
LDNO 132kV/EHV: LV Generation Aggregated		0 or 8	-2.489	-0.407	-0.030	0.00			
LDNO 132kV/EHV: LV Sub Generation Aggregated		0 or 8	-2.393	-0.361	-0.025	0.00			
LDNO 132kV/EHV: LV Generation Site Specific		0	-2.489	-0.407	-0.030	0.00			0.101

Tariff name	Unique billing identifier	PCs	Red/black unit charge p/kWh	Amber/yellow unit charge p/kWh	Green unit charge p/kWh	Fixed charge p/MPAN/day	Capacity charge p/kVA/day	Exceeded capacity charge p/kVA/day	Reactive power charge p/kVArh
LDNO 132kV/EHV: LV Sub Generation Site Specific		0	-2.393	-0.361	-0.025	0.00			0.085
LDNO 132kV/EHV: HV Generation Site Specific		0	-2.778	-0.305	-0.018	270.55			0.116
LDNO 132kV: Domestic Aggregated or CT with Residual		0, 1, 2	1.765	0.289	0.021	1.50			
LDNO 132kV: Domestic Aggregated (related MPAN)		2	1.765	0.289	0.021				
LDNO 132kV: Non-Domestic Aggregated or CT No Residual		0, 3, 4, 5-8	1.702	0.278	0.020	1.94			
LDNO 132kV: Non-Domestic Aggregated or CT Band 1		0, 3, 4, 5-8	1.702	0.278	0.020	1.93			
LDNO 132kV: Non-Domestic Aggregated or CT Band 2		0, 3, 4, 5-8	1.702	0.278	0.020	1.86			
LDNO 132kV: Non-Domestic Aggregated or CT Band 3		0, 3, 4, 5-8	1.702	0.278	0.020	1.72			
LDNO 132kV: Non-Domestic Aggregated or CT Band 4		0, 3, 4, 5-8	1.702	0.278	0.020	1.29			
LDNO 132kV: Non-Domestic Aggregated (related MPAN)		4	1.702	0.278	0.020				
LDNO 132kV: LV Site Specific No Residual		0	1.162	0.168	0.012	3.43	1.53	1.53	0.036
LDNO 132kV: LV Site Specific Band 1		0	1.162	0.168	0.012	2.30	1.53	1.53	0.036
LDNO 132kV: LV Site Specific Band 2		0	1.162	0.168	0.012	1.58	1.53	1.53	0.036

Tariff name	Unique billing identifier	PCs	Red/black unit charge p/kWh	Amber/yellow unit charge p/kWh	Green unit charge p/kWh	Fixed charge p/MPAN/day	Capacity charge p/kVA/day	Exceeded capacity charge p/kVA/day	Reactive power charge p/kVArh
LDNO 132kV: LV Site Specific Band 3		0	1.162	0.168	0.012	0.19	1.53	1.53	0.036
LDNO 132kV: LV Site Specific Band 4		0	1.160	0.166	0.009	0.00	1.53	1.53	0.036
LDNO 132kV: LV Sub Site Specific No Residual		0	1.047	0.115	0.007	12.83	2.53	2.53	0.032
LDNO 132kV: LV Sub Site Specific Band 1		0	1.047	0.115	0.007	10.99	2.53	2.53	0.032
LDNO 132kV: LV Sub Site Specific Band 2		0	1.047	0.115	0.007	9.82	2.53	2.53	0.032
LDNO 132kV: LV Sub Site Specific Band 3		0	1.047	0.115	0.007	7.55	2.53	2.53	0.032
LDNO 132kV: LV Sub Site Specific Band 4		0	1.043	0.111	0.003	7.25	2.53	2.53	0.032
LDNO 132kV: HV Site Specific No Residual		0	0.937	0.096	0.005	60.50	2.76	2.76	0.026
LDNO 132kV: HV Site Specific Band 1		0	0.937	0.096	0.005	47.06	2.76	2.76	0.026
LDNO 132kV: HV Site Specific Band 2		0	0.937	0.096	0.005	27.19	2.76	2.76	0.026
LDNO 132kV: HV Site Specific Band 3		0	0.937	0.095	0.005	0.00	2.76	2.76	0.026
LDNO 132kV: HV Site Specific Band 4		0	0.932	0.091	0.001	0.00	2.76	2.76	0.026
LDNO 132kV: Unmetered Supplies		0, 1 or 8	4.665	0.730	0.436				

Tariff name	Unique billing identifier	PCs	Red/black unit charge p/kWh	Amber/yellow unit charge p/kWh	Green unit charge p/kWh	Fixed charge p/MPAN/day	Capacity charge p/kVA/day	Exceeded capacity charge p/kVA/day	Reactive power charge p/kVArh
LDNO 132kV: LV Generation Aggregated		0 or 8	-1.800	-0.295	-0.022	0.00			
LDNO 132kV: LV Sub Generation Aggregated		0 or 8	-1.731	-0.261	-0.018	0.00			
LDNO 132kV: LV Generation Site Specific		0	-1.800	-0.295	-0.022	0.00			0.073
LDNO 132kV: LV Sub Generation Site Specific		0	-1.731	-0.261	-0.018	0.00			0.061
LDNO 132kV: HV Generation Site Specific		0	-2.009	-0.221	-0.013	195.66			0.084
LDNO 0000: Domestic Aggregated or CT with Residual		0, 1, 2	0.497	0.081	0.006	0.42			
LDNO 0000: Domestic Aggregated (related MPAN)		2	0.497	0.081	0.006				
LDNO 0000: Non-Domestic Aggregated or CT No Residual		0, 3, 4, 5-8	0.479	0.078	0.006	0.55			
LDNO 0000: Non-Domestic Aggregated or CT Band 1		0, 3, 4, 5-8	0.479	0.078	0.006	0.54			
LDNO 0000: Non-Domestic Aggregated or CT Band 2		0, 3, 4, 5-8	0.479	0.078	0.006	0.52			
LDNO 0000: Non-Domestic Aggregated or CT Band 3		0, 3, 4, 5-8	0.479	0.078	0.006	0.48			
LDNO 0000: Non-Domestic Aggregated or CT Band 4		0, 3, 4, 5-8	0.479	0.078	0.006	0.36			
LDNO 0000: Non-Domestic Aggregated (related MPAN)		4	0.479	0.078	0.006				

Tariff name	Unique billing identifier	PCs	Red/black unit charge p/kWh	Amber/yellow unit charge p/kWh	Green unit charge p/kWh	Fixed charge p/MPAN/day	Capacity charge p/kVA/day	Exceeded capacity charge p/kVA/day	Reactive power charge p/kVArh
LDNO 0000: LV Site Specific No Residual		0	0.327	0.047	0.003	0.97	0.43	0.43	0.010
LDNO 0000: LV Site Specific Band 1		0	0.327	0.047	0.003	0.65	0.43	0.43	0.010
LDNO 0000: LV Site Specific Band 2		0	0.327	0.047	0.003	0.45	0.43	0.43	0.010
LDNO 0000: LV Site Specific Band 3		0	0.327	0.047	0.003	0.05	0.43	0.43	0.010
LDNO 0000: LV Site Specific Band 4		0	0.327	0.047	0.003	0.00	0.43	0.43	0.010
LDNO 0000: LV Sub Site Specific No Residual		0	0.295	0.032	0.002	3.62	0.71	0.71	0.009
LDNO 0000: LV Sub Site Specific Band 1		0	0.295	0.032	0.002	3.10	0.71	0.71	0.009
LDNO 0000: LV Sub Site Specific Band 2		0	0.295	0.032	0.002	2.77	0.71	0.71	0.009
LDNO 0000: LV Sub Site Specific Band 3		0	0.295	0.032	0.002	2.13	0.71	0.71	0.009
LDNO 0000: LV Sub Site Specific Band 4		0	0.294	0.031	0.001	2.04	0.71	0.71	0.009
LDNO 0000: HV Site Specific No Residual		0	0.264	0.027	0.001	17.04	0.78	0.78	0.007
LDNO 0000: HV Site Specific Band 1		0	0.264	0.027	0.001	13.26	0.78	0.78	0.007
LDNO 0000: HV Site Specific Band 2		0	0.264	0.027	0.001	7.66	0.78	0.78	0.007

Tariff name	Unique billing identifier	PCs	Red/black unit charge p/kWh	Amber/yellow unit charge p/kWh	Green unit charge p/kWh	Fixed charge p/MPAN/day	Capacity charge p/kVA/day	Exceeded capacity charge p/kVA/day	Reactive power charge p/kVArh
LDNO 0000: HV Site Specific Band 3		0	0.264	0.027	0.001	0.00	0.78	0.78	0.007
LDNO 0000: HV Site Specific Band 4		0	0.263	0.026	0.000	0.00	0.78	0.78	0.007
LDNO 0000: Unmetered Supplies		0, 1 or 8	1.314	0.206	0.123				
LDNO 0000: LV Generation Aggregated		0 or 8	-0.507	-0.083	-0.006	0.00			
LDNO 0000: LV Sub Generation Aggregated		0 or 8	-0.488	-0.074	-0.005	0.00			
LDNO 0000: LV Generation Site Specific		0	-0.507	-0.083	-0.006	0.00			0.021
LDNO 0000: LV Sub Generation Site Specific		0	-0.488	-0.074	-0.005	0.00			0.017
LDNO 0000: HV Generation Site Specific		0	-0.566	-0.062	-0.004	55.12			0.024

Annex 5 – Schedule of Line Loss Factors

LLF time periods:

Southern Electric Power Distribution plc - Illustrative LLFs Effective from 1st April 2027				
Time periods	**Period 1**	**Period 2**	**Period 3**	**Period 4**
Notes	All the above times are in UK Clock time			

Generic demand and generation LLFs					
Metered voltage, respective periods and associated LLFCs / DUoS Tariff IDs					
Metered voltage	**Period 1**	**Period 2**	**Period 3**	**Period 4**	**Associated LLFC / DUoS Tariff ID**
Low Voltage Network					
Low Voltage Substation					
High Voltage Network					
High Voltage Substation					
33kV Generic					
132/33kV Generic					
132kV Generic					

EHV site specific LLFs					
Demand					
Tariff	**Period 1**	**Period 2**	**Period 3**	**Period 4**	**Associated LLFC / DUoS Tariff ID**

EHV site specific LLFs					
Generation					
Tariff	Period 1	Period 2	Period 3	Period 4	Associated LLFC / DUoS Tariff ID

Annex 6 – Charges for New or Amended Designated EHV Properties

Note: The list of MPANs / MSIDs provided may be incomplete; the DNO reserves the right to apply the listed charges to any other MPANs / MSIDs associated with the site.

Southern Electric Power Distribution plc - Effective from 1 April 2027 - Final new or amended designated EHV charges														
Effective from date	Import LLFC / DUoS Tariff ID	Import MPANs/MSIDs	Export LLFC / DUoS Tariff ID	Export MPANs/MSIDs	Name	Residual Charging Band	Import Super Red unit charge (p/kWh)	Import fixed charge (p/day)	Import capacity charge (p/kVA/day)	Import exceeded capacity charge (p/kVA/day)	Export Super Red unit charge (p/kWh)	Export fixed charge (p/day)	Export capacity charge (p/kVA/day)	Export exceeded capacity charge (p/kVA/day)
01/04/27	IDNO	IDNO	IDNO	IDNO	Tariff 543	1	0.000	2017.95	0.85	0.85	0.000	8302.44	0.05	0.05
01/04/27	IDNO	IDNO	IDNO	IDNO	Tariff 544	1	0.000	2054.90	0.85	0.85	0.000	8265.49	0.05	0.05
01/04/27	847	2000050662007	928	2000050662016	Tariff 67	1	0.000	2249.07	0.92	0.92	0.000	678.38	0.05	0.05
01/04/27	TBC	2000061003526	TBC	2000061009012	Tariff 545		0.000	2.96	1.27	1.27	0.000	1554.68	0.05	0.05
01/04/27	TBC	2000061045660	TBC	2000061091550	Tariff 542		0.000	6647.13	1.20	1.20	0.000	34914.90	0.05	0.05
01/04/27	731	2000056151106	742	2000056151115	Tariff 248		0.000	59.14	0.81	0.81	0.000	96.10	0.05	0.05
01/04/27	IDNO	IDNO	IDNO	IDNO	Tariff 546		0.000	249.05	0.85	0.85	0.000	249.05	0.05	0.05

Southern Electric Power Distribution plc - Effective from 1 April 2027 - Final new or amended designated EHV line loss factors														
Effective from date	Import LLFC / DUoS Tariff ID	Import MPANs/MSIDs	Export LLFC / DUoS Tariff ID	Export MPANs/MSIDs	Name	Residual Charging Band	Import LLF period 1	Import LLF period 2	Import LLF period 3	Import LLF period 4	Export LLF period 1	Export LLF period 2	Export LLF period 3	Export LLF period 4

Annex 7 – Final Supplier of last Resort and Eligible Bad Debt Pass-Through Costs

Southern Electric Power Distribution plc - Effective from 1 April 2027 - Final Supplier of Last Resort and Eligible Bad Debt Pass-Through Costs

Tariff name	Open LLFCs / DUoS Tariff IDs / LDNO unique billing identifier	PCs	Supplier of Last Resort Fixed charge adder* p/MPAN/day	Eligible Bad Debt Fixed charge adder** p/MPAN/day
Domestic Aggregated or CT with Residual	100-111, 154-157, 160-161, 456, Q55	0, 1, 2	0.00	0.00
Non-Domestic Aggregated or CT No Residual	H00, H05, H10, H15, H20, H25, H30, H35, H40, H45, H50, H55, H60, H70, H75, H80, Q00, Q56	0, 3, 4, 5-8		0.00
Non-Domestic Aggregated or CT Band 1	H01, H06, H11, H16, H21, H26, H31, H36, H41, H46, H51, H56, H61, H71, H76, H81, Q01, Q57	0, 3, 4, 5-8		0.00
Non-Domestic Aggregated or CT Band 2	H02, H07, H12, H17, H22, H27, H32, H37, H42, H47, H52, H57, H62, H72, H77, H82, Q02, Q58	0, 3, 4, 5-8		0.00
Non-Domestic Aggregated or CT Band 3	H03, H08, H13, H18, H23, H28, H33, H38, H43, H48, H53, H58, H63, H73, H78, H83, Q03, Q59	0, 3, 4, 5-8		0.00
Non-Domestic Aggregated or CT Band 4	H04, H09, H14, H19, H24, H29, H34, H39, H44, H49, H54, H59, H64, H74, H79, H84, Q04, Q60	0, 3, 4, 5-8		0.00

Tariff name	Open LLFCs / DUoS Tariff IDs / LDNO unique billing identifier	PCs	Supplier of Last Resort Fixed charge adder* p/MPAN/day	Eligible Bad Debt Fixed charge adder** p/MPAN/day
LV Site Specific No Residual	H85	0		0.00
LV Site Specific Band 1	H86	0		0.00
LV Site Specific Band 2	H87	0		0.00
LV Site Specific Band 3	H88	0		0.00
LV Site Specific Band 4	H89	0		0.00
LV Sub Site Specific No Residual	H90	0		0.00
LV Sub Site Specific Band 1	H91	0		0.00
LV Sub Site Specific Band 2	H92	0		0.00
LV Sub Site Specific Band 3	H93	0		0.00
LV Sub Site Specific Band 4	H94	0		0.00
HV Site Specific No Residual	Q45	0		0.00
HV Site Specific Band 1	Q46	0		0.00
HV Site Specific Band 2	Q47	0		0.00

Tariff name	Open LLFCs / DUoS Tariff IDs / LDNO unique billing identifier	PCs	Supplier of Last Resort Fixed charge adder* p/MPAN/day	Eligible Bad Debt Fixed charge adder** p/MPAN/day
HV Site Specific Band 3	Q48	0		0.00
HV Site Specific Band 4	Q49	0		0.00
LDNO LV: Domestic Aggregated or CT with Residual		0, 1, 2	0.00	0.00
LDNO LV: Non-Domestic Aggregated or CT No Residual		0, 3, 4, 5-8		0.00
LDNO LV: Non-Domestic Aggregated or CT Band 1		0, 3, 4, 5-8		0.00
LDNO LV: Non-Domestic Aggregated or CT Band 2		0, 3, 4, 5-8		0.00
LDNO LV: Non-Domestic Aggregated or CT Band 3		0, 3, 4, 5-8		0.00
LDNO LV: Non-Domestic Aggregated or CT Band 4		0, 3, 4, 5-8		0.00
LDNO LV: LV Site Specific No Residual		0		0.00
LDNO LV: LV Site Specific Band 1		0		0.00
LDNO LV: LV Site Specific Band 2		0		0.00
LDNO LV: LV Site Specific Band 3		0		0.00
LDNO LV: LV Site Specific Band 4		0		0.00

Tariff name	Open LLFCs / DUoS Tariff IDs / LDNO unique billing identifier	PCs	Supplier of Last Resort Fixed charge adder* p/MPAN/day	Eligible Bad Debt Fixed charge adder** p/MPAN/day
LDNO HV: Domestic Aggregated or CT with Residual		0, 1, 2	0.00	0.00
LDNO HV: Non-Domestic Aggregated or CT No Residual		0, 3, 4, 5-8		0.00
LDNO HV: Non-Domestic Aggregated or CT Band 1		0, 3, 4, 5-8		0.00
LDNO HV: Non-Domestic Aggregated or CT Band 2		0, 3, 4, 5-8		0.00
LDNO HV: Non-Domestic Aggregated or CT Band 3		0, 3, 4, 5-8		0.00
LDNO HV: Non-Domestic Aggregated or CT Band 4		0, 3, 4, 5-8		0.00
LDNO HV: LV Site Specific No Residual		0		0.00
LDNO HV: LV Site Specific Band 1		0		0.00
LDNO HV: LV Site Specific Band 2		0		0.00
LDNO HV: LV Site Specific Band 3		0		0.00
LDNO HV: LV Site Specific Band 4		0		0.00
LDNO HV: LV Sub Site Specific No Residual		0		0.00
LDNO HV: LV Sub Site Specific Band 1		0		0.00

Tariff name	Open LLFCs / DUoS Tariff IDs / LDNO unique billing identifier	PCs	Supplier of Last Resort Fixed charge adder* p/MPAN/day	Eligible Bad Debt Fixed charge adder** p/MPAN/day
LDNO HV: LV Sub Site Specific Band 2		0		0.00
LDNO HV: LV Sub Site Specific Band 3		0		0.00
LDNO HV: LV Sub Site Specific Band 4		0		0.00
LDNO HV: HV Site Specific No Residual		0		0.00
LDNO HV: HV Site Specific Band 1		0		0.00
LDNO HV: HV Site Specific Band 2		0		0.00
LDNO HV: HV Site Specific Band 3		0		0.00
LDNO HV: HV Site Specific Band 4		0		0.00
LDNO HVplus: Domestic Aggregated or CT with Residual		0, 1, 2	0.00	0.00
LDNO HVplus: Non-Domestic Aggregated or CT No Residual		0, 3, 4, 5-8		0.00
LDNO HVplus: Non-Domestic Aggregated or CT Band 1		0, 3, 4, 5-8		0.00
LDNO HVplus: Non-Domestic Aggregated or CT Band 2		0, 3, 4, 5-8		0.00
LDNO HVplus: Non-Domestic Aggregated or CT Band 3		0, 3, 4, 5-8		0.00

Tariff name	Open LLFCs / DUoS Tariff IDs / LDNO unique billing identifier	PCs	Supplier of Last Resort Fixed charge adder* p/MPAN/day	Eligible Bad Debt Fixed charge adder** p/MPAN/day
LDNO HVplus: Non-Domestic Aggregated or CT Band 4		0, 3, 4, 5-8		0.00
LDNO HVplus: LV Site Specific No Residual		0		0.00
LDNO HVplus: LV Site Specific Band 1		0		0.00
LDNO HVplus: LV Site Specific Band 2		0		0.00
LDNO HVplus: LV Site Specific Band 3		0		0.00
LDNO HVplus: LV Site Specific Band 4		0		0.00
LDNO HVplus: LV Sub Site Specific No Residual		0		0.00
LDNO HVplus: LV Sub Site Specific Band 1		0		0.00
LDNO HVplus: LV Sub Site Specific Band 2		0		0.00
LDNO HVplus: LV Sub Site Specific Band 3		0		0.00
LDNO HVplus: LV Sub Site Specific Band 4		0		0.00
LDNO HVplus: HV Site Specific No Residual		0		0.00
LDNO HVplus: HV Site Specific Band 1		0		0.00

Tariff name	Open LLFCs / DUoS Tariff IDs / LDNO unique billing identifier	PCs	Supplier of Last Resort Fixed charge adder* p/MPAN/day	Eligible Bad Debt Fixed charge adder** p/MPAN/day
LDNO HVplus: HV Site Specific Band 2		0		0.00
LDNO HVplus: HV Site Specific Band 3		0		0.00
LDNO HVplus: HV Site Specific Band 4		0		0.00
LDNO EHV: Domestic Aggregated or CT with Residual		0, 1, 2	0.00	0.00
LDNO EHV: Non-Domestic Aggregated or CT No Residual		0, 3, 4, 5-8		0.00
LDNO EHV: Non-Domestic Aggregated or CT Band 1		0, 3, 4, 5-8		0.00
LDNO EHV: Non-Domestic Aggregated or CT Band 2		0, 3, 4, 5-8		0.00
LDNO EHV: Non-Domestic Aggregated or CT Band 3		0, 3, 4, 5-8		0.00
LDNO EHV: Non-Domestic Aggregated or CT Band 4		0, 3, 4, 5-8		0.00
LDNO EHV: LV Site Specific No Residual		0		0.00
LDNO EHV: LV Site Specific Band 1		0		0.00
LDNO EHV: LV Site Specific Band 2		0		0.00
LDNO EHV: LV Site Specific Band 3		0		0.00

Tariff name	Open LLFCs / DUoS Tariff IDs / LDNO unique billing identifier	PCs	Supplier of Last Resort Fixed charge adder* p/MPAN/day	Eligible Bad Debt Fixed charge adder** p/MPAN/day
LDNO EHV: LV Site Specific Band 4		0		0.00
LDNO EHV: LV Sub Site Specific No Residual		0		0.00
LDNO EHV: LV Sub Site Specific Band 1		0		0.00
LDNO EHV: LV Sub Site Specific Band 2		0		0.00
LDNO EHV: LV Sub Site Specific Band 3		0		0.00
LDNO EHV: LV Sub Site Specific Band 4		0		0.00
LDNO EHV: HV Site Specific No Residual		0		0.00
LDNO EHV: HV Site Specific Band 1		0		0.00
LDNO EHV: HV Site Specific Band 2		0		0.00
LDNO EHV: HV Site Specific Band 3		0		0.00
LDNO EHV: HV Site Specific Band 4		0		0.00
LDNO 132kV/EHV: Domestic Aggregated or CT with Residual		0, 1, 2	0.00	0.00
LDNO 132kV/EHV: Non-Domestic Aggregated or CT No Residual		0, 3, 4, 5-8		0.00

Tariff name	Open LLFCs / DUoS Tariff IDs / LDNO unique billing identifier	PCs	Supplier of Last Resort Fixed charge adder* p/MPAN/day	Eligible Bad Debt Fixed charge adder** p/MPAN/day
LDNO 132kV/EHV: Non-Domestic Aggregated or CT Band 1		0, 3, 4, 5-8		0.00
LDNO 132kV/EHV: Non-Domestic Aggregated or CT Band 2		0, 3, 4, 5-8		0.00
LDNO 132kV/EHV: Non-Domestic Aggregated or CT Band 3		0, 3, 4, 5-8		0.00
LDNO 132kV/EHV: Non-Domestic Aggregated or CT Band 4		0, 3, 4, 5-8		0.00
LDNO 132kV/EHV: LV Site Specific No Residual		0		0.00
LDNO 132kV/EHV: LV Site Specific Band 1		0		0.00
LDNO 132kV/EHV: LV Site Specific Band 2		0		0.00
LDNO 132kV/EHV: LV Site Specific Band 3		0		0.00
LDNO 132kV/EHV: LV Site Specific Band 4		0		0.00
LDNO 132kV/EHV: LV Sub Site Specific No Residual		0		0.00
LDNO 132kV/EHV: LV Sub Site Specific Band 1		0		0.00
LDNO 132kV/EHV: LV Sub Site Specific Band 2		0		0.00
LDNO 132kV/EHV: LV Sub Site Specific Band 3		0		0.00

Tariff name	Open LLFCs / DUoS Tariff IDs / LDNO unique billing identifier	PCs	Supplier of Last Resort Fixed charge adder* p/MPAN/day	Eligible Bad Debt Fixed charge adder** p/MPAN/day
LDNO 132kV/EHV: LV Sub Site Specific Band 4		0		0.00
LDNO 132kV/EHV: HV Site Specific No Residual		0		0.00
LDNO 132kV/EHV: HV Site Specific Band 1		0		0.00
LDNO 132kV/EHV: HV Site Specific Band 2		0		0.00
LDNO 132kV/EHV: HV Site Specific Band 3		0		0.00
LDNO 132kV/EHV: HV Site Specific Band 4		0		0.00
LDNO 132kV: Domestic Aggregated or CT with Residual		0, 1, 2	0.00	0.00
LDNO 132kV: Non-Domestic Aggregated or CT No Residual		0, 3, 4, 5-8		0.00
LDNO 132kV: Non-Domestic Aggregated or CT Band 1		0, 3, 4, 5-8		0.00
LDNO 132kV: Non-Domestic Aggregated or CT Band 2		0, 3, 4, 5-8		0.00
LDNO 132kV: Non-Domestic Aggregated or CT Band 3		0, 3, 4, 5-8		0.00
LDNO 132kV: Non-Domestic Aggregated or CT Band 4		0, 3, 4, 5-8		0.00
LDNO 132kV: LV Site Specific No Residual		0		0.00

Tariff name	Open LLFCs / DUoS Tariff IDs / LDNO unique billing identifier	PCs	Supplier of Last Resort Fixed charge adder* p/MPAN/day	Eligible Bad Debt Fixed charge adder** p/MPAN/day
LDNO 132kV: LV Site Specific Band 1		0		0.00
LDNO 132kV: LV Site Specific Band 2		0		0.00
LDNO 132kV: LV Site Specific Band 3		0		0.00
LDNO 132kV: LV Site Specific Band 4		0		0.00
LDNO 132kV: LV Sub Site Specific No Residual		0		0.00
LDNO 132kV: LV Sub Site Specific Band 1		0		0.00
LDNO 132kV: LV Sub Site Specific Band 2		0		0.00
LDNO 132kV: LV Sub Site Specific Band 3		0		0.00
LDNO 132kV: LV Sub Site Specific Band 4		0		0.00
LDNO 132kV: HV Site Specific No Residual		0		0.00
LDNO 132kV: HV Site Specific Band 1		0		0.00
LDNO 132kV: HV Site Specific Band 2		0		0.00
LDNO 132kV: HV Site Specific Band 3		0		0.00

Tariff name	Open LLFCs / DUoS Tariff IDs / LDNO unique billing identifier	PCs	Supplier of Last Resort Fixed charge adder* p/MPAN/day	Eligible Bad Debt Fixed charge adder** p/MPAN/day
LDNO 132kV: HV Site Specific Band 4		0		0.00
LDNO 0000: Domestic Aggregated or CT with Residual		0, 1, 2	0.00	0.00
LDNO 0000: Non-Domestic Aggregated or CT No Residual		0, 3, 4, 5-8		0.00
LDNO 0000: Non-Domestic Aggregated or CT Band 1		0, 3, 4, 5-8		0.00
LDNO 0000: Non-Domestic Aggregated or CT Band 2		0, 3, 4, 5-8		0.00
LDNO 0000: Non-Domestic Aggregated or CT Band 3		0, 3, 4, 5-8		0.00
LDNO 0000: Non-Domestic Aggregated or CT Band 4		0, 3, 4, 5-8		0.00
LDNO 0000: LV Site Specific No Residual		0		0.00
LDNO 0000: LV Site Specific Band 1		0		0.00
LDNO 0000: LV Site Specific Band 2		0		0.00
LDNO 0000: LV Site Specific Band 3		0		0.00
LDNO 0000: LV Site Specific Band 4		0		0.00
LDNO 0000: LV Sub Site Specific No Residual		0		0.00

Tariff name	Open LLFCs / DUoS Tariff IDs / LDNO unique billing identifier	PCs	Supplier of Last Resort Fixed charge adder* p/MPAN/day	Eligible Bad Debt Fixed charge adder** p/MPAN/day
LDNO 0000: LV Sub Site Specific Band 1		0		0.00
LDNO 0000: LV Sub Site Specific Band 2		0		0.00
LDNO 0000: LV Sub Site Specific Band 3		0		0.00
LDNO 0000: LV Sub Site Specific Band 4		0		0.00
LDNO 0000: HV Site Specific No Residual		0		0.00
LDNO 0000: HV Site Specific Band 1		0		0.00
LDNO 0000: HV Site Specific Band 2		0		0.00
LDNO 0000: HV Site Specific Band 3		0		0.00
LDNO 0000: HV Site Specific Band 4		0		0.00

*Supplier of Last Resort pass-through costs allocated to all domestic tariffs with a fixed charge (including LDNO)
**Eligible Bad Debt pass-through costs allocated to all metered demand tariffs (including LDNO)