Southern Electric Power Distribution plc

Use of System Charging Statement

NOTICE OF CHARGES

Effective from 1st April 2026

Version 1.2

The form of this statement was approved by the Gas and Electricity Markets Authority on 31 March 2025.

Scottish and Southern Electricity Networks is a trading name of: Scottish and Southern Energy Power Distribution Limited Registered in Scotland No. SC213459; Scottish Hydro Electric Transmission plc Registered in Scotland No. SC213461; Scottish Hydro Electric Power Distribution plc Registered in Scotland No SC213460 (all having their Registered Offices at Inveralmond House 200 Dunkeld Road Perth PH1 3AQ); and Southern Electric Power Distribution plc Registered in England & Wales No. 04094290 having its Registered Office at No. 1 Forbury Place, 43 Forbury Road, Reading, Berks, RG1 3JH. www.ssen.co.uk

Version Control

Version	Date	Description of version and any changes made
V 1.0	14/02/2025	SEPD DUoS Charges Final April 2026 (LC14 format)
V 1.1	19/02/2026	Annex 1 and 7 – Addition of LLFCs Annex 2 – Addition of new MPANs and updated LLFCs/MSIDs Annex 5 – Addition of LLFs Annex 6 – Addition of new or amended charges and/or LLFs
V 1.2	October 2026	Annex 6 – Addition of new or amended charges and/or LLFs

A change-marked version of this statement can be provided upon request.

Contents

1. . Introduction 5

Validity period 5
Contact details 6

2. . Charge Application and Definitions 7

Supercustomer/Aggregated Billing and Payment 7
Supercustomer/Aggregated Charges 8
Site-Specific Billing and Payment 8
Site-Specific Billed Charges 8
Components of Charges 9
Time Periods 9
Application of Capacity Charges 10
Chargeable Capacity 10
Exceeded Capacity 10
Demand Exceeded Capacity 10
Generation Exceeded Capacity 10
Standby Capacity for Additional Security on Site 11
Minimum Capacity Levels 11
Application of charges for reactive power 11
Demand Chargeable Reactive Power 11
Generation Chargeable Reactive Power 11
Allocation of Charges 12
Generation Charges for Pre-2005 designated EHV properties 13
Provision of billing data 13
Out of Area Use of System Charges 13
Licensed Distributor Network Operator charges 13
Licence exempt distribution networks 14
Full settlement metering 14
Difference metering 14
Shared Metering 14
Gross settlement 14

3. . Schedule of Charges for use of the Distribution System 16

4. . Schedule of Line Loss Factors 17

Role of Line Loss Factors in the Supply of Electricity 17
Calculation of Line Loss Factors 17
Publication of Line Loss Factor tables 17

5. . Notes for Designated EHV Properties 19

EDCM network group costs 19
Charges for New Designated EHV Properties 19
Charges for Amended Designated EHV Properties 19
Demand Side Management 19

6. . Electricity Distribution Rebates 20

7. . Accounting and Administration Services 21

8. . Charges for electrical plant provided ancillary to the grant of Use of System 22

9. . Schedule of fixed adders to recover Supplier of Last Resort and Eligible Bad Debt pass-through costs 23

Supplier of Last Resort 23
Eligible Bad Debt 23
Tables of Fixed Adders 23

10. Non-Final Demand Sites 24

11. Back-up Connections 25

Appendix 1 – Glossary 26

Appendix 2 - Guidance notes 33

Background 33
Meter point administration 33
Your charges 34
Reducing your charges 34
Reactive power and reactive power charges 34
Site-specific EDCM charges 35
Additional Notes 37

Appendix 3 – Non-Final Demand Site Certificate 38

Annex 1 - Schedule of Charges for use of the Distribution System by LV and HV Designated Properties, and Unmetered Supplies 39

Annex 2 - Schedule of Charges for use of the Distribution System by Designated EHV Properties (including LDNOs with Designated EHV Properties/end-users) 43

Annex 3 - Schedule of Charges for use of the Distribution System by Preserved/Additional LLF Classes 62

Annex 4 - Charges applied to LDNOs with HV/LV end-users 63

Annex 5 – Schedule of Line Loss Factors 79

LLF time periods: 79

Annex 6 – Charges for New or Amended Designated EHV Properties 96

Annex 7 – Final Supplier of last Resort and Eligible Bad Debt Pass-Through Costs 100

1. Introduction

1.1 This statement tells you about our charges and the reasons behind them. It has been prepared consistent with Standard Licence Condition 14 of our Electricity Distribution Licence. The main purpose of this statement is to provide our schedule of charges[1] for the use of our Distribution System and to provide the schedule of Line Loss Factors[2] that should be applied in Settlement to account for losses from the Distribution System. We have also included guidance notes in Appendix 2 to help improve your understanding of the charges we apply.

1.2 Within this statement we use terms such as 'Users' and 'Customers' as well as other terms which are identified with initial capitalisation. These terms are defined in the Glossary.

1.3 This statement reflects the changes which have been introduced as a result of Market Wide Half Hourly Settlement (MHHS) [3]. Although the existing arrangements will continue to apply for Non-Migrated MPANs, the MHHS arrangements will be effective for any MPAN that has Migrated, any differences in treatment are highlighted throughout the document.

1.4 The charges in this statement are calculated using the following methodologies as per the Distribution Connection and Use of System Agreement (DCUSA)[4] :

- Common Distribution Charging Methodology (CDCM); for Low Voltage (LV) and High Voltage (HV) Designated Properties as per DCUSA Schedule 16; and
- Extra-High Voltage (EHV) Distribution Charging Methodology (EDCM); for Designated EHV Properties as per DCUSA Schedule 17.
- Price Control Disaggregation Model (PCDM); for Discount Percentages used to calculate the LDNO Use of System charges in the CDCM and EDCM as per DCUSA Schedule 29.

1.5 Separate charges are calculated depending on the characteristics of the connection and whether the use of the Distribution System is for demand or generation purposes. Where a generation connection is seen to support the Distribution System the charges will be negative and the Supplier will receive credits for exported energy.

1.6 The application of charges to premises can usually be referenced using the Line Loss Factor Class (LLFC)/DUoS Tariff ID contained in the charge tables. Further information on how to identify and calculate the charge that will apply for your premises is provided in the guidance notes in Appendix 2.

1.7 All charges in this statement are shown **exclusive** of VAT. Invoices will include VAT at the applicable rate.

1.8 The annexes that form part of this statement are also available in spreadsheet format. This spreadsheet contains supplementary information used for charging purposes and a simple model to assist you to calculate charges. This spreadsheet can be downloaded from our website www.ssen.co.uk.

Validity period

1.9 This charging statement is valid for services provided from the effective date stated on the front of the statement and remains valid until updated by a revised version or superseded by a statement with a later effective date.

1.10 When using this charging statement care should be taken to ensure that the relevant statement or statements covering the period that is of interest are used.

[1] Charges can be positive or negative.
[2] Known as adjustment factors in the Distribution Licence and commonly referred to as Loss Adjustment Factors. The schedule of Line Loss Factors will be provided in a revised statement shortly after the Line Loss Factors for the relevant year have been successfully audited by Elexon.
[3] Information relating to the Market wide HH Settlement Programme available from Home - MHHS Programme
[4] The Distribution and Connection Use of System Agreement (DCUSA) available from DCUSA Document - DCUSA

1.11 Notice of any revision to the statement will be provided to Users of our Distribution System (with the exception of updates to Annex 6; New or Amended EHV Sites which will be published as an addendum). The latest statements can be downloaded from www.ssen.co.uk.

Contact details

1.12 If you have any questions about this statement please contact us at the address shown below:

Distribution Pricing Team
Southern Electric Power Distribution plc
Inveralmond House
200 Dunkeld Road
Perth
PH1 3AQ
Email: DistributionPricingTeam@sse.com

1.13 All enquiries regarding Connection Agreements, changes to Maximum Capacities, and certification of Non-Final Demand sites should be addressed to:

Email: authorised.capacity@sse.com

Post:
Authorised Capacity
Scottish and Southern Electricity Networks
Daneshill Depot
Faraday Road
Basingstoke
RG24 8QQ

1.14 For all other queries please contact our general enquiries telephone number: 0800 048 3516.

2. Charge Application and Definitions

2.1 The following section details how the charges in this statement are applied and billed to Users of our Distribution System.

The Supercustomer/Aggregated and site-specific billing approaches

2.2 We utilise two billing approaches depending on the type of metering data received:

(a) The 'Supercustomer/Aggregated' approach for Customers for whom we receive aggregated consumption data through Settlement; and

(b) The 'Site-specific' approach for Customers for whom we receive site-specific consumption data through Settlement.

2.3 We receive aggregated consumption data through Settlement for:

Non-Migrated MPANS:

- Domestic and non-domestic Customers for whom Non-Half Hourly (NHH) metering data is used in Settlement (i.e. Customers with MPANs which are registered to Measurement Class A);
- Customers which are unmetered and are not settled as pseudo Half Hourly (HH) metered (i.e. Customers with MPANs which are registered to Measurement Class B);
- Domestic Customers for whom HH metering data is used in Settlement (i.e. Customers with MPANs which are registered to Measurement Class F); and
- Non-domestic Customers for whom HH metering data is used in Settlement and which have whole current (WC) metering (i.e. Customers with MPANs which are registered to Measurement Class G).

Migrated MPANs:

- All Customers who have a Connection Type that indicates a Whole Current connection, i.e. with Connection Type 'W'.

2.4 We receive site specific consumption data through Settlement for:

Non-Migrated MPANs:

- Customers for whom HH metering data is used in Settlement and which have current transformer (CT) metering (i.e. Customers with MPANs which are registered to measurement class C or E); and
- Customers which are unmetered and settled as pseudo HH metered (i.e. Customers with MPANs which are registered to measurement class D).

Migrated MPANs:

- All Customers who have a Connection Type of 'L' Low Voltage, 'H' High Voltage, 'E' Extra-High Voltage or 'U' Unmetered.

Supercustomer/Aggregated Billing and Payment

2.5 The Supercustomer/Aggregated approach makes use of aggregated data obtained from Suppliers using the 'Aggregated Distribution Use of System (DUoS) Report' data flow for Non-Migrated MPANs, and the 'LDSO report for DUoS – aggregated data' message or the 'Embedded Network report for DUoS – aggregated data' message for Migrated MPANs.

2.6 Invoices are calculated on a periodic basis and sent to each User for whom we transport electricity through our Distribution System. Invoices are reconciled, over a period of approximately 14 months to reflect later and more accurate consumption figures, this will reduce to 4 months following MHHS implementation.

2.7 The charges are applied on the basis of the LLFC/DUoS Tariff ID assigned to the MPAN, and the units consumed within the time periods specified in Annex 1. All LLFCs/DUoS Tariff ID are assigned at our sole discretion, based on the tariff application rules set out in the appropriate

charging methodology or elsewhere in this statement. Please refer to the section 'Allocation of Charges' if you believe the allocated LLFC/DUoS Tariff ID or tariff is incorrect.

Supercustomer/Aggregated Charges

2.8 Supercustomer/Aggregated charges are generally billed through the following components:

- a fixed charge, pence/MPAN/day; there will only be one fixed charge applied to each MPAN; and
- unit charges, pence/kilowatt-hour (kWh); three unit charges will apply depending on the time of day and the type of tariff for which the MPAN is registered.

2.9 Users who wish to supply electricity for whom we receive aggregated data through Settlement (see paragraph 2.3) will be allocated the relevant charge structure set out in Annex 1.

2.10 Identification of the appropriate charge can be made by cross reference to the LLFC/DUoS Tariff ID.

2.11 For Non-Migrated MPANs the Valid Settlement Profile Class (PC) /Standard Settlement Class (SSC)/ Meter Timeswitch Code (MTC) combinations for LLFC where the Metering System is Measurement Class A or B are detailed in Market Domain Data (MDD). For Migrated MPANs the appropriate reference data is contained in Industry Standing Data (ISD).

2.12 Where an MPAN has an invalid Settlement Combination, the 'Domestic Aggregated with Residual' fixed and unit charges will be applied as default until the invalid combination is corrected. Where there are multiple SSC/TPR combinations for Non-Migrated MPANs, the default 'Domestic Aggregated with Residual' fixed and unit charges will be applied for each invalid SSC/TPR combination.

2.13 The 'Domestic Aggregated (related MPAN)' and 'Non-Domestic Aggregated (related MPAN)' charges are supplementary to their respective primary MPAN charge.

Site-Specific Billing and Payment

2.14 The site-specific billing and payment approach makes use of HH metering data at premises level received through Settlement.

2.15 Invoices are calculated on a periodic basis and sent to each User for whom we transport electricity through our Distribution System. Where an account is based on estimated data, the account shall be subject to any adjustment that may be necessary following the receipt of actual data from the User.

2.16 The charges are applied on the basis of the LLFC/DuoS Tariff ID assigned to the MPAN or MSID for Central Volume Allocation (CVA) sites, and the units consumed within the time periods specified in this statement.

2.17 All LLFCs/DUoS Tariff IDs are assigned at our sole discretion, based on the tariff application rules set out in the appropriate charging methodology or elsewhere in this statement. Please refer to the section 'Allocation of Charges' if you believe the allocated LLFC/DUoS Tariff ID or tariff is incorrect.

Site-Specific Billed Charges

2.18 Site-specific billed charges for LV and HV Designated Properties may include the following components:

- a fixed charge in pence/MPAN/day for SVA sites, or pence/MSID/day for CVA sites;
- a capacity charge in pence/kilovolt-ampere (kVA)/day, for Maximum Import Capacity (MIC) and/or Maximum Export Capacity (MEC);
- an exceeded capacity charge in pence/kVA/day, if a site exceeds its MIC and/or MEC;
- three unit charges in pence/kWh, depending on the time of day and the type of tariff for which the MPAN is registered; and
- a reactive power charge in pence/kilovolt-ampere reactive hour (kVArh), for each unit in excess of the reactive charge threshold.

2.19 Site-specific billed charges for properties that are under transitional protection arrangements for BSC Modification P432 or MHHS will include only fixed and unit charges, in the same manner as Supercustomer/Aggregate charges, as described in 2.8.

2.20 Users who wish to supply electricity to Customers for whom we receive site-specific data through Settlement (see paragraph 2.4) will be allocated the relevant charge structure dependent upon the voltage and location of the Metering Point.

2.21 Fixed charges are generally levied on a pence per MPAN/MSID per day basis.

2.22 LV and HV Designated Properties will be charged in accordance with the CDCM and allocated the relevant charge structure set out in Annex 1.

2.23 Designated EHV Properties will be charged in accordance with the EDCM and allocated the relevant charge structure set out in Annex 2.

2.24 Where LV and HV Designated Properties or Designated EHV Properties have more than one point of connection (as identified in the Connection Agreement) then separate charges will be applied to each point of connection.

Components of Charges

Application of Residual Charges

2.25 The following sections explain the application of residual charges.

Final Demand Sites

2.26 Residual charges are recovered through fixed charges for all Final Demand Sites. All Non-Final Demand Sites must submit a valid certificate, as described in Section 10, and upon receipt of a valid certificate will be allocated to the relevant No Residual Tariff.

2.27 All Back-up Connections must provide clear supporting documentary evidence to the reasonable satisfaction of the LDNO, as described in Section 11, and upon receipt of sufficient evidence will be allocated to the relevant No Residual tariff.

Residual Charging Bands

2.28 Residual charges are applied to Final Demand Sites on a banded basis, with all sites in a given charge band receiving the same residual charge. Domestic customers have a single charging band.

2.29 There are four non-domestic charging bands for each of the following groups:

- Designated Properties connected at LV, billing with no MIC;
- Designated Properties connected at LV, billing with MIC;
- Designated Properties connected at HV; and
- Designated EHV Properties.

2.30 All non-domestic Final Demand customers are allocated into one of the four charging bands, for each relevant charge structure.

2.31 The residual charging band boundaries are calculated nationally based upon data from all LDNOs. The method and timing for calculating the residual charging band boundaries and the method and timing for allocating customers into the residual charging bands are set out in Schedule 32 of DCUSA.

2.32 The boundaries for the residual bands can be found in the 'Schedule of Charges and Other Tables' spreadsheet on our website, as well as the mapping between the DUoS Tariff name and TNUOS site charging band.

Time Periods

2.33 The time periods for the application of unit charges to LV and HV Designated Properties are detailed in Annex 1. We have not issued a notice to change the time bands.

2.34 The time periods for the application of unit charges to Unmetered Supply Exit Points are detailed in Annex 1. We have not issued a notice to change the time bands

2.35 The time periods for the application of unit charges to Designated EHV Properties are detailed in Annex 2. We have not issued a notice to change the time bands.

Application of Capacity Charges

2.36 The following sections explain the application of capacity charges and exceeded capacity charges.

Chargeable Capacity

2.37 The chargeable capacity is, for each billing period, the MIC/MEC as detailed below.

2.38 The MIC/MEC will be agreed with us at the time of connection or pursuant to a later change in requirements. Following such an agreement (be it at the time of connection or later) no reduction in MIC/MEC will be allowed for a 12 month period.

2.39 Reductions to the MIC/MEC may only be permitted once in a 12 month period. Where the MIC/MEC is reduced the new lower level will be agreed with reference to the level of the Customer's maximum import and/or export demand respectively. The new MIC/MEC will be applied from the start of the next billing period after the date that the request was received. It should be noted that, where a new lower level is agreed, the original capacity may not be available in the future without the need for network reinforcement and associated charges.

2.40 In the absence of an agreement, the chargeable capacity, save for error or omission, will be based on the last MIC/MEC previously agreed by us for the relevant premises' connection. A Customer can seek to agree or vary the MIC/MEC by contacting us using the contact details in section 1.11.

Exceeded Capacity

2.41 Where a Customer takes additional unauthorised capacity over and above the MIC/MEC, the excess will be classed as exceeded capacity. The exceeded portion of the capacity will be charged at the exceeded capacity charge p/kVA/day rate, based on the difference between the MIC/MEC and the actual capacity used. This will be charged for the duration of the full month in which the breach occurs.

Demand Exceeded Capacity

$$\text{Demand Exceeded Capacity} = \max(2 \times \sqrt{AI^2 + \max(RI, RE)^2} - MIC, 0)$$

Where:
AI = Active Import (kWh)
RI = Reactive Import (kVArh)
RE = Reactive Export (kVArh)
MIC = Maximum Import Capacity (kVA)

2.42 Only reactive import and reactive export values occurring at times of active import are used in the calculation. Where data for two or more MPANs is aggregated for billing purposes the HH consumption values are summated prior to the calculation above.

2.43 This calculation is completed for every half hour and the maximum value from the billing period is applied.

Generation Exceeded Capacity

$$\text{Generation Exceeded Capacity} = \max(2 \times \sqrt{AE^2 + \max(RI, RE)^2} - MEC, 0)$$

Where:
AE = Active Export (kWh)
RI = Reactive Import (kVArh)
RE = Reactive Export (kVArh)
MEC = Maximum Export Capacity (kVA)

2.44 Only reactive import and reactive export values occurring at times of active export are used in the calculation. Where data for two or more MPANs is aggregated for billing purposes the HH consumption values occurring at times of kWh export are summated prior to the calculation above.

2.45 This calculation is completed for every half hour and the maximum value from the billing period is applied.

Standby Capacity for Additional Security on Site

2.46 Where standby capacity charges are applied, the charge will be set at the same rate as that applied to the normal MIC. Should a Customer's request for additional security of supply require the provision of capacity from two different sources, we reserve the right to charge for the capacity held at each source.

Minimum Capacity Levels

2.47 There is no minimum capacity threshold.

Application of charges for reactive power

2.48 When an individual HH metered MPAN's reactive power (measured in kVArh) at LV and HV Designated Properties exceeds 33% of its total active power (measured in kWh), reactive power charges will apply. This threshold is equivalent to an average power factor of 0.95 during the period. Any reactive units in excess of the 33% threshold are charged at the rate appropriate to the particular charge.

2.49 Power Factor is calculated as follows:

Cos θ = Power Factor

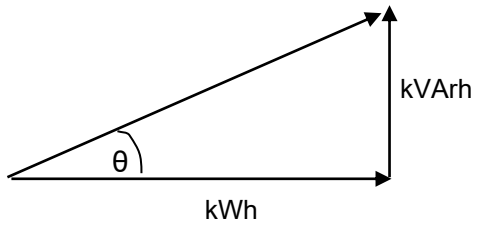

2.50 The chargeable reactive power is calculated as follows:

Demand Chargeable Reactive Power

$$\text{Demand Chargeable kVArh} = \max\left(\max(\text{RI},\text{RE}) - \left(\sqrt{\left(\frac{1}{0.95^2} - 1\right)} \times \text{AI}\right), 0\right)$$

Where:
AI = Active Import (kWh)
RI = Reactive Import (kVArh)
RE = Reactive Export (kVArh)

2.51 Only reactive import and reactive export values occurring at times of active import are used in the calculation. Where data for two or more MPANs is aggregated for billing purposes the HH consumption values are summated prior to the calculation above.

2.52 The square root calculation will be to two decimal places.

2.53 This calculation is completed for every half hour and the values summated over the billing period.

Generation Chargeable Reactive Power

$$\text{Generation Chargeable kVArh} = \max\left(\max(\text{RI},\text{RE}) - \left(\sqrt{\left(\frac{1}{0.95^2} - 1\right)} \times \text{AE}\right), 0\right)$$

Where:
AE = Active Export (kWh)
RI = Reactive Import (kVArh)
RE = Reactive Export (kVArh)

2.54 Only reactive import and reactive export values occurring at times of active export are used in the calculation. Where data for two or more MPANs is aggregated for billing purposes the HH consumption values are summated prior to the calculation above.

2.55 The square root calculation will be to two decimal places.

2.56 This calculation is completed for every half hour and the values summated over the billing period.

Allocation of Charges

2.57 It is our responsibility to apply the correct charges to each MPAN/MSID. The allocation of charges is based on the voltage of connection, import/export details including multiple MPANs, metering information and, for some tariffs, the metering location.

2.58 We are responsible for deciding the voltage of connection. Generally, this is determined by where the metering is located and where responsibility for the electrical equipment transfers from us to the connected Customer.

2.59 We are also responsible for allocating non-domestic customers into their residual charging bands. Allocation into residual charging bands is determined by consumption for customers billed under the Supercustomer/Aggregated approach and for properties that are under transitional protection arrangements for BSC Modification P432 or MHHS, and by the MIC for all other customers billed under the site-specific approach.

2.60 The Supplier determines and provides us with the metering information and data. This enables us to allocate charges where there is more than one charge per voltage level. The metering information and data is likely to change over time if, for example, a Supplier changes from a two rate meter to a single rate meter. When we are notified this has happened we will change the allocation of charges accordingly.

2.61 If it has been identified that a charge has been incorrectly allocated due to the metering information and/or data then a correction request should be made to the Supplier.

2.62 Where it has been identified that:

(a) a charge is likely to be incorrectly allocated due to the voltage of connection, import/export details or metering location, or allocation to residual charging band; or

(b) a connection may be eligible for Low Voltage Substation tariff(s);

a request to investigate the applicable charges should be made to us. Requests from persons other than the Customer or the current Supplier must be accompanied by a Letter of Authority from the Customer and the current Supplier must also acknowledge that they are aware a request has been made. Any request must be supported by an explanation of why it is believed that the current charge should be changed, along with supporting information including, where appropriate, photographs of metering positions or system diagrams. Any request to change the current charge that also includes a request for backdating must include justification as to why it is considered appropriate to backdate the change.

2.63 Where a residual charging band allocation cannot be resolved, the process provided within DCUSA Schedule 32 should be followed.

2.64 An administration charge (covering our reasonable costs) may be made if a technical assessment or site visit is required, but we will not apply any charge where we agree to the change request.

2.65 Where we agree that the current LLFC/DUoS Tariff ID charge should be changed, we will then allocate the appropriate set of charges for the connection. Any adjustment will be applied from the date of the request back to either:

(a) the date of incorrect allocation in respect of paragraphs 2.61 or 2.62(a); or

(b) up to the maximum period specified by the Limitation Act (1980) in England and Wales, which covers a six year period;

whichever is the shorter.

2.66 Any credit or additional charge will be issued to the relevant Supplier(s) effective during the period of the change.

2.67 Should we reject the request (as per paragraph 2.62) a justification will be provided to the requesting Party. We shall not unreasonably withhold or delay any decision on a request to change the charges applied and would expect to confirm our position on the request within three months of the date of request.

Generation Charges for Pre-2005 designated EHV properties

2.68 Designated EHV Properties that were connected to the Distribution System under a pre-2005 connection charging policy are eligible for exemption from DUoS charges for generation unless one of the following criteria has been met:

- 25 years have passed since their first energisation/connection date, i.e. Designated EHV Properties with Connection Agreements dated prior to 1st April 2005, and for which 25 years has passed since their first energisation/connection date will receive use of system charges for generation from the next charging year following the expiry of their 25 years exemption starting 1st April, or
- the person responsible for the Designated EHV Property has provided notice to us that they wish to opt in to DUoS charges for generation.

If a notice to opt in has been provided there will be no further opportunity to opt out.

2.69 Furthermore, if an exempt Customer makes an alteration to its export requirement then the Customer may be liable to be charged for the additional capacity required for energy imported or exported. For example, where a generator increases its export capacity the incremental increase in export capacity will attract DUoS charges as with other non-exempt generators.

Provision of billing data

2.70 Where HH metering data is required for DUoS charging and this is not provided in accordance with the BSC or DCUSA, such metering data shall be provided by the User of the system to us in respect of each calendar month within five working days of the end of that calendar month.

2.71 The metering data shall identify the amount of energy conveyed across the Metering System in each half hour of each day and shall separately identify active and reactive import and export. Metering data provided to us shall be consistent with that received through the metering equipment installed.

2.72 Metering data shall be provided in an electronic format specified by us from time to time and in the absence of such specification, metering data shall be provided in a comma-separated text file in the format of data flow D0275[5] for Non-Migrated MPANs, and the IF-21 message for Migrated MPANs (as agreed with us). The data shall be e-mailed to duos.income.billing@sse.com.

2.73 We require details of reactive power imported or exported to be provided for all Measurement Class C and E sites for Non-Migrated MPANs, and for all Migrated MPANs with a connection type of 'L', 'H', or 'E'. It is also required for CVA sites and Exempt Distribution Network boundaries with difference metering. We reserve the right to levy a charge on Users who fail to provide such reactive data. In order to estimate missing reactive data, a power factor of 0.95 lag will be applied to the active consumption in any half hour.

Out of Area Use of System Charges

2.74 We operate embedded distribution networks in all other DNO areas in England & Wales. The charges for these 'out of area' networks are provided in a separate charging statement. This statement is available from our website www.ssen.co.uk.

Licensed Distributor Network Operator charges

2.75 Licensed Distribution Network Operator (LDNO) charges are applied to LDNOs who operate Embedded Networks within our Distribution Services Area.

2.76 The charge structure for LV and HV Designated Properties embedded in networks operated by LDNOs will mirror the structure of the 'All-the-way' charge and is dependent upon the voltage of

[5] Data Transfer Catalogue available from https://www.electralink.co.uk/dtc-catalogue

connection of each Embedded Network to the Host DNO's network. The relevant charge structures are set out in Annex 4.

2.77 Where a NHH metered MPAN has an invalid Settlement combination, the 'LDNO HV: Domestic Aggregated with Residual' fixed and unit charges will be applied as default until the invalid combination is corrected. Where there are multiple SSC/TPR combinations for Non-Migrated MPANs, the default 'LDNO HV: Domestic Aggregated with Residual' fixed and unit charges will be applied for each invalid TPR combination.

2.78 The charge structure for Designated EHV Properties embedded in networks operated by LDNOs will be calculated individually using the EDCM. The relevant charge structures are set out in Annex 2.

2.79 For Nested Networks the relevant charging principles set out in DCUSA Schedule 21 will apply.

Licence exempt distribution networks

2.80 The Electricity and Gas (Internal Market) Regulations 2011[6] introduced obligations on owners of licence exempt distribution networks (sometimes called private networks) including a duty to facilitate access to electricity and gas Suppliers for Customers within those networks.

2.81 When Customers (both domestic and commercial) are located within a licence exempt distribution network and require the ability to choose their own Supplier this is called 'third party access'. These embedded Customers will require an MPAN so that they can have their electricity supplied by a Supplier of their choice.

2.82 Licence exempt distribution networks owners can provide third party access using either full settlement metering or the difference metering approach. [7]

Full settlement metering

2.83 This is where a licence exempt distribution network is set up so that each embedded installation has an MPAN and Metering System and therefore all Customers purchase electricity from their chosen Supplier. In this case there are no Settlement Metering Systems at the boundary between the licensed Distribution System and the licence exempt distribution network.

2.84 In this approach our DUoS charges may be applied to each MPAN.

Difference metering

2.85 This is where one or more, but not all, Customers on a licence exempt distribution network choose their own Supplier for electricity supply to their premises. Under this approach the Customers requiring third party access on the licence exempt distribution network will have their own MPAN and must have a HH Metering System.

Shared Metering

2.86 This is where one or more Customers on a license exempt distribution network choose their own Supplier for electricity supply to their premises, and the active import and/or active export meter readings at the boundary are apportioned between the Suppliers. Under this approach, the Customers requiring third party access on the license exempt distribution network will have their own MPAN and must have a HH Metering System.

2.87 In this approach our DUoS charges may be applied to each MPAN.

Gross settlement

2.88 Where one of our MPANs (prefixed by the number 20) is embedded within a licence exempt distribution network connected to our Distribution System, and difference metering is in place for Settlement purposes and we receive gross measurement data for the boundary MPAN, we will continue to charge the boundary MPAN Supplier for use of our Distribution System. No charges

[6] The Electricity and Gas (Internal Market) Regulations 2011 available from http://www.legislation.gov.uk/uksi/2011/2704/contents/made

[7] Elexon's guide is available from https://www.elexon.co.uk/guidance-note/third-party-access-licence-exempt-distribution-networks/

will be levied by us directly to the Customer or Supplier of the embedded MPAN(s) connected within the licence exempt distribution network.

2.89 We require that gross metered data for the boundary of the connection is provided to us. Until a new industry data flow is introduced for the sending of such gross data, gross metered data shall:

- be provided in a text file in the format of the D0036 or D0275 data flow;
- the text file shall be emailed to duos.income.billing@sse.com;
- the title of the email should also contain the phrase "gross data for difference metered private network" and contain the metering reference specified by us in place of the Settlement MPAN; and
- the text filename shall be formed of the metering reference specified by us followed by a hyphen and followed by a timestamp in the format YYYYMMDDHHMMSS and followed by ".txt".

2.90 For the avoidance of doubt, the reduced difference metered measurement data for the boundary connection that is to enter Settlement should continue to be sent using the Settlement MPAN.

3. Schedule of Charges for use of the Distribution System

3.1 Tables listing the charges for use of our Distribution System are published in annexes to this document.

3.2 These charges are also listed in a spreadsheet which is published with this statement and can be downloaded from our website www.ssen.co.uk.

3.3 Annex 1 contains the charges applied to LV and HV Designated Properties.

3.4 Annex 2 contains the charges applied to Designated EHV Properties and charges applied to LDNOs for Designated EHV Properties connected to their Distribution Systems.

3.5 Annex 3 contains details of any preserved and additional charges that are valid at this time. Preserved charges are mapped to an appropriate charge and are closed to new Customers.

3.6 Annex 4 contains the charges applied to LDNOs in respect of LV and HV Designated Properties connected to their Distribution Systems.

4. Schedule of Line Loss Factors

Role of Line Loss Factors in the Supply of Electricity

4.1 Electricity entering or exiting our Distribution System is adjusted to take account of energy that is lost[8] as it is distributed through the network. This adjustment does not affect distribution charges but is used in energy settlement to take metered consumption to a notional Grid Supply Point so that Suppliers' purchases take account of the energy lost on the Distribution System.

4.2 We are responsible for calculating the Line Loss Factors (LLFs) and providing these to Elexon. Elexon is the company that manages the BSC.

4.3 LLFs are used to adjust the Metering System volumes to take account of losses on the Distribution System.

Calculation of Line Loss Factors

4.4 LLFs are calculated in accordance with BSCP128 which sets out the procedures and principles with which our LLF methodology must comply. It also defines the procedure and timetable by which LLFs are reviewed and submitted.

4.5 LLFs are calculated for a set number of time periods during the year, using either a generic or a site specific method. The generic method is used for sites connected at LV or HV and the site specific method is used for sites connected at EHV or where a request for site specific LLFs has been agreed. Generic LLFs will be applied as a default to all new EHV sites until sufficient data is available for a site specific calculation.

Where the usage profile for a given site contains insufficiently large consumption or generation volumes to enable calculation of realistic Site Specific LLFs then a default calculation, or default replacement process shall be undertaken.

A default replacement process shall be deemed to have been undertaken if a generic methodology is used where the following applies:

(a) A Site has multiple connections to the Total System and the primary connection is at EHV but there is a subordinate connection that is not connected at EHV, then a generic methodology MAY be used for the subordinate connection (even if a Site specific LLF is used for the Site's primary connection); and

(b) The connection has a capacity of less than or equal to 1MVA

The definition of EHV used for LLF purposes differs from the definition used for defining Designated EHV Properties in the EDCM. The definition used for LLF purposes can be found in our LLF methodology, which can be found on the Elexon website[9].

Publication of Line Loss Factor tables

4.6 The LLFs used in Settlement are published on the Elexon Portal[10] . The website contains the LLFs in standard industry data formats and in a summary form. A user guide with details on registering and using the portal is also available.

4.7 BSCP 128 sets out the timetable by which LLFs are submitted and audited. The submission and audit occurs between September and December in the year prior to the LLFs becoming effective. Only after the completion of the audit at the end of December and BSC approval are the final LLFs published.

[8] Energy can be lost for technical and non-technical reasons and losses normally occur by heat dissipation through power flowing in conductors and transformers. Losses can also reduce if a Customer's action reduces power flowing in the distribution network. This might happen when a Customer generates electricity and the produced energy is consumed locally.

[9] The following page has links to BSCP128 and to our LLF methodology: http://www.elexon.co.uk/reference/technical-operations/losses/

[10] The Elexon Portal can be accessed from www.elexonportal.co.uk

4.8 At the time that this charging statement is first published, Annex 5 will be intentionally left blank, as this statement is published a complete year before the LLFs have been calculated and audited. Once the final BSCP128 Audit Report has been received, we will issue an updated version of Annex 5 containing the audited LLF values.

4.9 When using the tables in Annex 5, reference should be made to the LLFC allocated to a Non-Migrated MPAN or to the DUoS Tariff ID allocated to a Migrated MPAN to find the appropriate values.

5. Notes for Designated EHV Properties

EDCM network group costs

5.1 A table is provided in the accompanying spreadsheet which shows the underlying Forward Cost Pricing (FCP) network group costs used to calculate the current EDCM charges. This spreadsheet (SEPD – Schedule of charges and other tables.xlsx) is available to download from our website www.ssen.co.uk.

5.2 These are illustrative of the modelled costs at the time that this statement was published. A new connection will result in changes to current network utilisations which will then form the basis of future prices. The charge determined in this statement will not necessarily be the charge in subsequent years because of the interaction between new and existing network connections and any other changes made to our Distribution System which may affect charges.

Charges for New Designated EHV Properties

5.3 Charges for any new Designated EHV Properties calculated after publication of the current statement will be published on our website in an addendum to that statement as and when necessary. The addendum will include charge information of the type found in Annex 2, and LLFs as found in Annex 5.

5.4 The form of the addendum is detailed in Annex 6 of this statement.

5.5 The new Designated EHV Properties' charges will be added to Annex 2 in the next full statement released.

Charges for Amended Designated EHV Properties

5.6 Where an existing Designated EHV Property connection is modified and energised in the charging year, we may revise our EDCM charges for the modified Designated EHV Property. If revised charges are appropriate, an addendum will be sent to all relevant parties and published as a revised 'Schedule of Charges and Other Tables' spreadsheet on our website www.ssen.co.uk. The modified Designated EHV Property charges will be added to Annex 2 in the next full statement released.

Demand Side Management

5.7 New or existing Designated EHV Property Customers may wish to offer part of their MIC to be interruptible by us (for active network management purposes other than normal planned or unplanned outages) in order to benefit from any reduced DUoS charges calculated using the EDCM.

5.8 Several options exist in which we may agree for some or the entire MIC to be interruptible. Under the EDCM the applicable demand capacity costs would be based on the MIC minus the capacity subject to interruption.

5.9 If you are interested in making part or all of your MIC interruptible as an integral irrevocable feature of a new connection or modification to an existing connection you should in the first instance contact our connections function;

connections@ssen.co.uk

You must make an express statement in your application that you have an interest in some or all of the import capacity being interruptible for active network management purposes.

5.10 If you are proactively interested in voluntarily but revocably offering to make some or all of your existing connection's MIC interruptible you should in the first instance contact us at the address in paragraph 5.9.

6. Electricity Distribution Rebates

6.1 We have neither given nor announced any DUoS rebates to Users in the 12 months preceding the date of publication of this version of the statement.

7. Accounting and Administration Services

7.1 Other than the charges noted below, no Accounting and Administration charges are detailed within this statement. Please refer to our Statement of Miscellaneous Charges for details of our transactional charges and other notices.

7.2 We reserve the right to impose payment default remedies. The remedies are as set out in the DCUSA where applicable or else as detailed in the following paragraph.

7.3 If any invoices that are not subject to a valid dispute remain unpaid on the due date, late payment interest (calculated at Base Rate plus 8%) and administration charges may be imposed.

7.4 Our administration charges are detailed in the following table. These charges are set at a level which is in line with the Late Payment of Commercial Debts Act;

Size of Unpaid Debt	**Late Payment Fee**
Up to £999.99	£40.00
£1,000 to £9,999.99	£70.00
£10,000 or more	£100.00

8. Charges for electrical plant provided ancillary to the grant of Use of System

8.1 No charges for electrical plant provided ancillary to the grant of Use of System are detailed within this statement. Please refer to our Statement of Miscellaneous Charges for details of transactional charges and other notices.

9. Schedule of fixed adders to recover Supplier of Last Resort and Eligible Bad Debt pass-through costs

Supplier of Last Resort

9.1 In accordance with Standard Condition 38B 'Last Resort Supply Payment Claims' ('SLC38B') and Special Condition 6 'Pass-through expenditure' ('SpC6') of our Electricity Distribution Licence, our charges will recover the amount of payments in Regulatory Year t made in response to Last Resort Supply Payment claims.

Eligible Bad Debt

9.2 In accordance with SpC6, our charges will recover the amount of use of system bad debt the Authority has consented to be recovered. This represents use of system bad debt our charges are recovering on behalf of Independent Distribution Network Operators (IDNOs), in accordance with Standard Licence Condition 38C 'Treatment of Valid Bad Debt Claims' ('SLC38C'), and specifically paragraph 4 of that condition.

Tables of Fixed Adders

9.3 Tables listing the charges to recover Supplier of Last Resort and Eligible Bad Debt pass-through costs are published in Annex 7 to this document. The charges are shown for information only and are already included in the final Annex 1 charges.

10. Non-Final Demand Sites

Charges for Non-Final Demand Sites

10.1. A Non-Final Demand Site is charged an import tariff that excludes the residual cost element of charges. If the User wishes for a property to qualify for allocation to these tariffs, then the User must submit certification declaring that the property meets the required criteria as per DCUSA.

Process for submitting certification

10.2. This certification should take the form as set out in Appendix 3 and be submitted to Authorised Capacity using the contact details in 1.13.

We may, at our discretion, request a signed paper certificate from the User, in place of electronic. If requested, paper certification should be posted to the contact details in 1.13.

10.3. Users should undertake reasonable endeavours to ensure the facts attested to in the certification are true. We may request documentation evidencing these endeavours, including where appropriate, photographs of metering positions or system diagrams, following receipt of the certification.

10.4. If we determine that the documentation provided does not sufficiently evidence the undertaking of reasonable endeavours, does not support the facts attested to in the certification, or if no documentation is received, we may at our discretion reject the certification as invalid. If the certification is rejected as invalid, then the property will not qualify as a Non-Final Demand Site.

Application of charges for Non-Final Demand Sites

10.5. A property will only be deemed to qualify as a Non-Final Demand Site, and be allocated charges as such, from the date on which we receive valid certification.

10.6. If a property that has previously been certified as a Non-Final Demand Site no longer satisfies the criteria as per DCUSA, then the User must inform us immediately.

10.7. For a property that has been previously certified as a Non-Final Demand Site, we will continue to apply the relevant no residual import tariff without the requirement for further certification, except in any one of the following circumstances:

(a) Where we have reason to believe that the property no longer qualifies as a Non-Final Demand Site; or,

(b) Significant time has passed since the certification was submitted; or,

(c) Where there is a change to the connection characteristics i.e. capacity change.

If such circumstances occur, we may request re-certification of the site, or reject the certification as invalid at our discretion.

10.8. When a property no longer meets the required criteria to qualify as a Non-Final Demand Site, we will change the allocation of charges accordingly from that point.

10.9. Please refer to the section 'Allocation of Charges' if you believe the property has been incorrectly not allocated charges as a Non-Final Demand Site.

11. Back-up Connections

Charges for Back-up Connections

11.1. A Back-up Connection is charged an import tariff that excludes the residual cost element of charges. If the User wishes for a MPAN/MSID to qualify for allocation to these tariffs, then the User must provide evidence necessary to satisfy the definition of Back-up Connection as per DCUSA.

Process for providing evidence

11.2. Users should undertake reasonable endeavours to ensure the facts attested to in the request are true. We may request documentation evidencing these endeavours, including where appropriate, photographs of metering positions or system diagrams.

11.3. If we determine that the documentation provided does not sufficiently evidence the undertaking of reasonable endeavours, does not support the facts attested to in the request, or if no documentation is received, we may at our discretion reject the evidence as invalid. If the evidence is rejected as invalid, then the property will not qualify as a Back-up Connection.

Application of charges for Back-up Connections

11.4. A MPAN/MSID will only be deemed to qualify as a Back-up Connection, and be allocated charges as such, from the first of the month following the date on which we receive valid evidence.

11.5. If a MPAN/MSID that has previously been appointed as a Back-up Connection no longer satisfies the criteria as per DCUSA, then the User must inform us immediately.

11.6. For a MPAN/MSID that has been previously certified as a Back-up Connection, we will continue to apply the relevant no residual import tariff without the requirement for further certification, except in any one of the following circumstances:

(a) Where we have reason to believe that the MPAN/MSID no longer qualifies as a Back-up Connection; or

(b) Significant time has passed since the evidence was submitted; or

(c) Where there is a change to the connection characteristics i.e. capacity change.

If such circumstances occur, we may request evidence to be provided again for the site, or reject the evidence as invalid at our discretion.

11.7. When a MPAN/MSID no longer meets the required criteria to qualify as a Back-up Connection, we will change the allocation of charges accordingly from that point.

11.8. Please refer to the section 'Allocation of Charges' if you believe the MPAN/MSID has been incorrectly not allocated charges as a Back-up Connection.

Appendix 1 – Glossary

1.1. The following definitions, which can extend to grammatical variations and cognate expressions, are included to aid understanding:

Term	Definition
All-the-way Charge	A charge that is applicable to an end user rather than an LDNO. An end user in this context is a Supplier/User who has a registered MPAN or MSID and is using the Distribution System to transport energy on behalf of a Customer.
Back-up Connection	As defined in DCUSA Schedule 32.
Balancing and Settlement Code (BSC)	The BSC contains the governance arrangements for electricity balancing and settlement in Great Britain. An overview is available from https://www.elexon.co.uk/bsc-and-codes/balancing-settlement-code/
Balancing and Settlement Code Procedure (BSCP)	A document of that title, as established or adopted and from time to time modified by the Panel in accordance with The Code, setting out procedures to be complied with (by Parties, Party Agents, BSC Agents, BSCCo, the Panel and others) in, and other matters relating to, the implementation of The Code;
Common Distribution Charging Methodology (CDCM)	The CDCM used for calculating charges to Designated Properties as required by standard licence condition 13A of the Electricity Distribution Licence.
Connection Agreement	An agreement between an LDNO and a Customer which provides that the Customer has the right for its connected installation to be and remain directly or indirectly connected to that LDNO's Distribution System.
Connection Type	Defines the physical connection as one of four valid types for metered supplies: 'W' Whole Current; 'L' Low Voltage (LV) Current Transformer; 'H' High Voltage (HV) Current Transformer; or 'E' Extra High Voltage (EHV) Current Transformer (E). It will also include a value of 'U' for unmetered connections.
Central Volume Allocation (CVA)	As defined in the BSC.
Customer	A person to whom a User proposes to supply, or for the time being supplies, electricity through an exit point, or from who, a User or any relevant exempt Supplier, is entitled to recover charges, compensation or an account of profits in respect of electricity supplied through an exit point; or A person from whom a User purchases, or proposes to purchase, electricity, at an entry point (who may from time to time be supplied with electricity as a Customer of that User (or another electricity Supplier) through an exit point).
Designated EHV Properties	As defined in standard condition 13B of the Electricity Distribution Licence.

<table>
<tr><th>Term</th><th>Definition</th></tr>
<tr><td>Designated Properties</td><td>As defined in standard condition 13A of the Electricity Distribution Licence.</td></tr>
<tr><td>Distribution Connection and Use of System Agreement (DCUSA)</td><td>The DCUSA is a multi-party contract between the licensed electricity distributors, suppliers, generators and Offshore Transmission Owners of Great Britain.
It is a requirement that all licensed electricity distributors and suppliers become parties to the DCUSA.</td></tr>
<tr><td>Distributor IDs</td><td>These are unique IDs that can be used, with reference to the MPAN, to identify your LDNO. The charges for other network operators can be found on their website.
<table>
<tr><th>ID</th><th>Distribution Service Area</th><th>Company</th></tr>
<tr><td>10</td><td>East of England</td><td>UK Power Networks</td></tr>
<tr><td>11</td><td>East Midlands</td><td>Western Power Distribution</td></tr>
<tr><td>12</td><td>London</td><td>UK Power Networks</td></tr>
<tr><td>13</td><td>Merseyside and North Wales</td><td>Scottish Power</td></tr>
<tr><td>14</td><td>Midlands</td><td>Western Power Distribution</td></tr>
<tr><td>15</td><td>Northern</td><td>Northern Powergrid</td></tr>
<tr><td>16</td><td>North Western</td><td>Electricity North West</td></tr>
<tr><td>17</td><td>Scottish Hydro Electric (and embedded networks in other areas)</td><td>Scottish Hydro Electric Power Distribution plc</td></tr>
<tr><td>18</td><td>South Scotland</td><td>Scottish Power</td></tr>
<tr><td>19</td><td>South East England</td><td>UK Power Networks</td></tr>
<tr><td>20</td><td>Southern Electric (and embedded networks in other areas)</td><td>Southern Electric Power Distribution plc</td></tr>
<tr><td>21</td><td>South Wales</td><td>Western Power Distribution</td></tr>
<tr><td>22</td><td>South Western</td><td>Western Power Distribution</td></tr>
<tr><td>23</td><td>Yorkshire</td><td>Northern Powergrid</td></tr>
<tr><td>24</td><td>All</td><td>Independent Power Networks</td></tr>
<tr><td>25</td><td>All</td><td>ESP Electricity</td></tr>
<tr><td>26</td><td>All</td><td>Last Mile Electricity Ltd</td></tr>
<tr><td>27</td><td>All</td><td>The Electricity Network Company Ltd</td></tr>
<tr><td>29</td><td>All</td><td>Harlaxton Energy Networks</td></tr>
<tr><td>30</td><td>All</td><td>Peel Electricity Networks Ltd</td></tr>
<tr><td>31</td><td>All</td><td>UK Power Distribution Ltd</td></tr>
<tr><td>32</td><td>All</td><td>Energy Assets Networks Limited</td></tr>
<tr><td>33</td><td>All</td><td>Eclipse Power Networks Ltd</td></tr>
<tr><td>34</td><td>All</td><td>Murphy Power Distribution Ltd</td></tr>
<tr><td>35</td><td>All</td><td>Fulcrum Electricity Assets Ltd</td></tr>
<tr><td>36</td><td>All</td><td>Vattenfall Networks Ltd</td></tr>
<tr><td>37</td><td>All</td><td>Forbury Assets Limited</td></tr>
<tr><td>38</td><td>All</td><td>Indigo Power Limited</td></tr>
</table></td></tr>
<tr><td>Distribution Network Operator (DNO)</td><td>An electricity distributor that operates one of the 14 distribution services areas and in whose Electricity Distribution Licence the requirements of Section B of the standard conditions of that licence have effect.</td></tr>
</table>

Term	Definition
Distribution Services Area	The area specified by the Gas and Electricity Markets Authority within which each DNO must provide specified distribution services.
Distribution System	The system consisting (wholly or mainly) of electric lines owned or operated by an authorised distributor that is used for the distribution of electricity from: • Grid Supply Points or generation sets or other entry points to the points of delivery to: • Customers or Users or any transmission licensee in its capacity as operator of that licensee's transmission system or the Great Britain (GB) transmission system and includes any remote transmission assets (owned by a transmission licensee within England and Wales) that are operated by that authorised distributor and any electrical plant, electricity meters, and metering equipment owned or operated by it in connection with the distribution of electricity, but does not include any part of the GB transmission system.
DUoS Tariff ID	An identifier assigned to an SVA metering system which is used to assign the use of system charges for Migrated MPANs
EHV Distribution Charging Methodology (EDCM)	The EDCM used for calculating charges to Designated EHV Properties as required by standard licence condition 13B of the Electricity Distribution Licence.
Electricity Distribution Licence	The Electricity Distribution Licence granted or treated as granted pursuant to section 6(1) of the Electricity Act 1989.
Electricity Distributor	Any person who is authorised by an Electricity Distribution Licence to distribute electricity.
Embedded Network	An electricity Distribution System operated by an LDNO and embedded within another Distribution System.
Embedded Network report for DUoS – aggregated data	A report of data by IDNO's DUoS Tariff ID and by IDNO providing counts of MPANs and units consumed
Engineering Recommendation P2/7	A document of the Energy Networks Association, which defines minimum planning standards for security of supply and is referred to in Standard Licence Condition 24 of our Electricity Distribution Licence.
Entry Point	A boundary point at which electricity is exported onto a Distribution System from a connected installation or from another Distribution System, not forming part of the total system (boundary point and total system having the meaning given to those terms in the BSC).
Exit Point	A point of connection at which a supply of electricity may flow from the Distribution System to the Customer's installation or User's installation or the Distribution System of another person.
Extra-High Voltage (EHV)	Nominal voltages of 22kV and above.
Final Demand Site	As defined in DCUSA Schedule 32

Term	Definition
Gas and Electricity Markets Authority (GEMA)	As established by the Utilities Act 2000.
Grid Supply Point (GSP)	A metered connection between the National Grid Electricity Transmission system and the licensee's Distribution System at which electricity flows to or from the Distribution System.
GSP group	A distinct electrical system that is supplied from one or more GSPs for which total supply into the GSP group can be determined for each half hour.
High Voltage (HV)	Nominal voltages of at least 1kV and less than 22kV.
Industry Standing Data (ISD)	Industry Standing Data (ISD) is the reference data used in Settlement processes under MHHS.
Intermittent Generation	Defined in DCUSA Schedule 16 as a generation plant where the energy source of the prime mover cannot be made available on demand, in accordance to the definitions in Engineering Recommendation P2/7.
Invalid Settlement Combination	A Settlement combination that is not recognised as a valid combination in market domain data – see https://www.elexonportal.co.uk/MDDVIEWER.
kVA	Kilovolt ampere.
kVArh	Kilovolt ampere reactive hour.
kW	Kilowatt.
kWh	Kilowatt hour (equivalent to one "unit" of electricity).
LDSO report for DUoS – aggregated data	A report of data by DUoS Tariff ID and Supplier providing counts of MPANs and units consumed
Licensed Distribution Network Operator (LDNO)	The holder of a Licence to distribute electricity.
Line Loss Factor (LLF)	The factor that is used in Settlement to adjust the metering system volumes to take account of losses on the Distribution System.
Line Loss Factor Class (LLFC)	An identifier assigned to an SVA metering system which is used to assign the LLF and use of system charges for Non-Migrated MPANs.
Load Factor	$= \frac{annual\ consumption\ (kWh)}{maximum\ demand\ (kW) \times hours\ in\ year}$
Low Voltage (LV)	Nominal voltages below 1kV.
LV Substation Tariff	This tariff applies as described in DCUSA Schedule 16 Section 141, Note 3, where the metering CT is within, or abutting to the HV/LV substation transformation chamber.
Market Domain Data (MDD)	MDD is a central repository of reference data available to all Users involved in Settlement. It is essential to the operation of SVA trading arrangements. More information can be found here Market Domain Data - Elexon BSC

Term	Definition
Market Segment	Market Segment is derived from the Meter Type and Connection Type using a defined set of business rules. There are three Market Segments: Smart and Non-Smart (Including Smart Meters with Settlement Period level data available, Smart Meters with only Register Readings available and Non-Smart Meters with Register Readings); Advanced (which are Advanced Metering Systems with Settlement Period level data available); Unmetered
Market-Wide HH Settlement (MHHS)	Market-wide Half-Hourly Settlement (MHHS) is a key enabler of the flexibility to support the transition to Net Zero. The MHHS Programme will contribute to a more cost-effective electricity system, encouraging more flexible use of energy and helping consumers lower their bills.
Maximum Export Capacity (MEC)	The MEC of apparent power expressed in kVA that has been agreed can flow through the entry point to the Distribution System from the Customer's installation as specified in the connection agreement.
Maximum Import Capacity (MIC)	The MIC of apparent power expressed in kVA that has been agreed can flow through the exit point from the Distribution System to the Customer's installation as specified in the connection agreement.
Measurement Class	A classification of Metering Systems used in the BSC which indicates how consumption is measured, i.e.: • Measurement Class A – non-half-hourly metering equipment; • Measurement Class B – non-half-hourly unmetered supplies; • Measurement Class C – half-hourly metering equipment at or above 100kW premises; • Measurement Class D – half-hourly unmetered supplies; • Measurement Class E – half-hourly metering equipment below 100kW premises, and from 5 November 2015, with current transformer; • Measurement Class F – half hourly metering equipment at below 100kW premises with current transformer or whole current, and at domestic premises; and • Measurement Class G – half hourly metering equipment at below 100kW premises with whole current and not at domestic premises.
Meter Timeswitch Code (MTC)	MTCs are three digit codes allowing Suppliers to identify the metering installed in Customers' premises. They indicate whether the meter is single or multi-rate, pre-payment or credit, or whether it is 'related' to another meter. Further information can be found in MDD.
Metering Point	The point at which electricity that is exported to or imported from the licensee's Distribution System is measured, is deemed to be measured, or is intended to be measured and which is registered pursuant to the provisions of the REC. For the purposes of this statement, GSPs are not 'Metering Points'.
Metering Point Administration Number (MPAN)	A number relating to a Metering Point under the REC.

Term	Definition
Metering System	Particular commissioned metering equipment installed for the purposes of measuring the quantities of exports and/or imports at the exit point or entry point.
Metering System Identifier (MSID)	MSID is a term used throughout the BSC and its subsidiary documents and has the same meaning as MPAN as used under the REC.
Migrated MPANs	Migration refers to the process by which MPANs are migrated from the legacy arrangements to the new MHHS arrangements.
Nested Networks	This refers to a situation where there is more than one level of Embedded Network and therefore nested Distribution Systems between LDNOs (e.g. host DNO→primary nested DNO→ secondary nested DNO→Customer).
Non-Final Demand (NFD) Site	As defined in DCUSA Schedule 32.
Non-Migrated MPANs	This refers to the status when an MPAN is on the legacy arrangements and before migrating under MHHS.
Non-Intermittent Generation	Defined in DCUSA Schedule 16 as a generation plant where the energy source of the prime mover can be made available on demand, in accordance with the definitions in Engineering Recommendation P2/7.
Ofgem	Office of Gas and Electricity Markets – Ofgem is governed by GEMA and is responsible for the regulation of the distribution companies.
Profile Class (PC)	A categorisation applied to NHH MPANs and used in settlement to group Customers with similar consumption patterns to enable the calculation of consumption profiles.
Retail Energy Code (REC)	A code that consolidates the switching arrangements historically set out in the Master Registration Agreement (MRA) and the Supply Point Administration Agreement (SPAA) (for gas) into one dual-fuel code. Provides a governance mechanism to manage the processes established between electricity suppliers and distribution companies to enable electricity suppliers to transfer customers. It includes terms for the provision of Metering Point Administration Services (MPAS) Registrations.
Settlement	The determination and settlement of amounts payable in respect of charges (including reconciling charges) in accordance with the BSC.
Settlement Class (SC)	The combination of Profile Class, Line Loss Factor Class, Time Pattern Regime and Standard Settlement Configuration, by Supplier within a GSP group and used for Settlement.
Standard Settlement Configuration (SSC)	A standard metering configuration relating to a specific combination of Time Pattern Regimes.
Supercustomer	The method of billing Users for use of system on an aggregated basis, grouping together consumption and standing charges for all similar NHH metered Customers or aggregated HH metered Customers. Also referred to as Aggregate Billing.
Supercustomer DUoS Report	A report of profiled data by Settlement Class providing counts of MPANs and units consumed.
Supplier	An organisation with a supply licence responsible for electricity supplied to and/or exported from a Metering Point.

Term	Definition
Supplier Volume Allocation (SVA)	As defined in the BSC.
Time Pattern Regime (TPR)	The pattern of switching behaviour through time that one or more meter registers follow.
Unmetered Supplies	Exit points deemed to be suitable as unmetered supplies as permitted in the Electricity (Unmetered Supply) Regulations 2001 and where operated in accordance with BSC procedure 520[11].
Use of System Charges	Charges which are applicable to those parties which use the Distribution System.
User	Someone that has a use of system agreement with the DNO e.g. a Supplier, generator or other LDNO.

[11] Balancing and Settlement Code Procedures are available from http://www.elexon.co.uk/pages/bscps.aspx

Appendix 2 - Guidance notes[12]

Background

1.1. The electricity bill from your Supplier contains an element of charge to cover electricity distribution costs. This distribution charge covers the cost of operating and maintaining a safe and reliable Distribution System that forms the 'wires' that transport electricity between the national transmission system and end users such as homes and businesses. Our Distribution System includes overhead lines, underground cables, as well as substations and transformers.

1.2. In most cases, your Supplier is invoiced for the distribution charge and this is normally part of your total bill. In some cases, for example business users, the Supplier may pass through the distribution charge as an identifiable line item on the electricity bill.

1.3. Where electricity is generated at a premises your Supplier may receive a credit for energy that is exported on to the Distribution System. These credits are intended to reflect that the exported generation may reduce the need for traditional demand led reinforcement of the Distribution System.

1.4. Understanding your distribution charges could help you reduce your costs and increase your credits. This is achieved by understanding the components of the charge to help you identify whether there may be opportunities to change the way you use the Distribution System.

Meter point administration

1.5. We are responsible for managing the electricity supply points that are connected to our Distribution System. Typically every supply point is identified by a Meter Point Administration Number (MPAN). A few supply points may have more than one MPAN depending on the metering configuration (e.g. a school which may have an MPAN for the main supply and an MPAN for catering).

1.6. The full MPAN is a 21 digit number, preceded by an 'S' and includes supplementary data. The MPAN applicable to a supply point is found on the electricity bill from your Supplier. This number enables you to establish who your electricity distributor is, details of the characteristics of the supply and importantly the distribution charges that are applicable to your premises.

1.7. The 21-digit number is normally presented in two sections as shown in the following diagram. The top section is supplementary data which gives information about the characteristics of supply, while the bottom 'core' is the unique identifier.

Full MPAN diagram

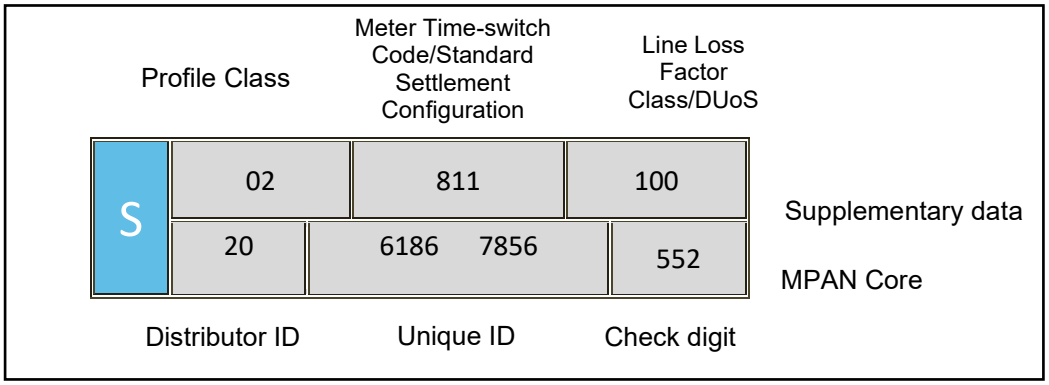

1.8. Generally, you will only need to know the Distributor ID and LLFC/DUoS Tariff ID to identify the distribution charges for your premises. However, there are some premises where charges are specific to that site. In these instances the charges are identified by the MPAN core. The Distributor ID for SEPD is 20. Other Distributor IDs can be referenced in the Glossary.

[12] These guidance notes are provided for additional information and do not form part of the application of charges.

1.9. Additionally it can be useful to understand the profile class provided in the supplementary data. The profile class will be a number between 00 and 08. The following list provides details of the allocation of profile classes to types of Customers:

- '01' – Domestic Customers with unrestricted supply
- '02' – Domestic Customers with restricted load, for example off-peak heating
- '03' – Non-domestic Customers with unrestricted supply
- '04' – Non-domestic Customers with restricted load, for example off-peak heating
- '05' – Non-domestic maximum demand Customers with a Load Factor of less than 20%
- '06' – Non-domestic maximum demand Customers with a Load Factor between 20% and 30%
- '07' – Non-domestic maximum demand Customers with a Load Factor between 30% and 40%
- '08' – Non-domestic maximum demand Customers with a Load Factor over 40% or non-half-hourly metered generation Customers
- '00' – Half-hourly metered demand and generation Customers (including all Migrated MPANs)

1.10. Unmetered Supplies will be allocated to profile class 01, 08 or 00 depending on the type of load or the measurement method of the load.

1.11. The allocation of the profile class will affect your charges for Non-Migrated MPANs. If you feel that you have been allocated the wrong profile class, please contact your Supplier as they are responsible for this.

Your charges

1.12. All distribution charges that relate to our Distributor ID 20 and to premises within our Distribution Services Area are provided in this statement. For distribution charges which relate to our Distributor ID 20 and to premises connected to an 'out of area' network, please refer to the statement referenced in paragraph 2.74.

1.13. You can identify your charges by referencing your LLFC/DUoS Tariff ID, from Annex 1. If the MPAN is for a Designated EHV Property then the charges will be found in Annex 2. In a few instances, the charges may be contained in Annex 3 or Annex 6. When identifying charges in Annex 2, please note that some LLFCs/DUoS Tariff IDs have more than one charge. In this instance you will need to select the correct charge by cross referencing with the MPAN core provided in the table.

1.14. Once you have identified which charge structure applies to your MPAN then you will be able to calculate an estimate of your distribution charge using the calculator provided in the spreadsheet 'Schedule of charges and other tables' found in the sheet called 'Charge Calculator'. This spreadsheet can be downloaded from www.ssen.co.uk.

Reducing your charges

1.15. The most effective way to reduce your energy charges is to reduce your consumption by switching off or using more energy efficient appliances. However, there are also other potential opportunities to reduce your distribution charges; for example, it may be beneficial to shift demand or generation to a better time period. Demand use is likely to be cheaper outside the peak periods and generation credits more beneficial during peak periods, although the ability to directly benefit will be linked to the structure of your supply charges.

1.16. The calculator mentioned above provides the opportunity to establish a forecast of the change in distribution charges that could be achieved if you are able to change any of the consumption related inputs.

Reactive power and reactive power charges

1.17. Reactive power is a separately charged component of connections that are half-hourly metered. Reactive power charges are generally avoidable if 'best practice' design of the properties' electrical installation has been provided in order to maintain a power factor between 0.95 and unity at the Metering Point.

1.18. Reactive Power (kVArh) is the difference between working power (active power measured in kW) and total power consumed (apparent power measured in kVA). Essentially it is a measure of how efficiently electrical power is transported through an electrical installation or a Distribution System.

1.19. Power flowing with a power factor of unity results in the most efficient loading of the Distribution System. Power flowing with a power factor of less than 0.95 results in much higher losses in the Distribution System, a need to potentially provide higher capacity electrical equipment and consequently a higher bill for you the consumer. A comparatively small improvement in power factor can bring about a significant reduction in losses since losses are proportional to the square of the current.

1.20. Different types of electrical equipment require some 'reactive power' in addition to 'active power' in order to work effectively. Electric motors, transformers and fluorescent lighting, for example, may produce poor power factors due to the nature of their inductive load. However, if good design practice is applied then the poor power factor of appliances can be corrected as near as possible to source. Alternatively, poor power factor can be corrected centrally near to the meter.

1.21. There are many advantages that can be achieved by correcting poor power factor. These include: reduced energy bills through lower reactive charges, lower capacity charges and reduced power consumption and reduced voltage drop in long cable runs.

Site-specific EDCM charges

1.22. A site classified as a Designated EHV Property is subject to a locational-based charging methodology (referred to as EDCM) for higher voltage network users. Distributors use one of two approved approaches: Long Run Incremental Cost (LRIC) or Forward Cost Pricing (FCP); we use the FCP. The EDCM will apply to Customers connected at Extra-High Voltage or connected at High Voltage and metered at a high voltage substation.

1.23. EDCM charges and credits are site-specific, reflecting the degree to which the local and higher voltage networks have the capacity to serve more demand without the need to upgrade the electricity infrastructure. The conditions for eligibility of generators for credits within the EDCM are specified in the applicable charging methodology. Generators that benefit from an exemption from UoS charges for generation, or that are intermittent in accordance to the definitions in Engineering Recommendation P2/7 and that cannot maintain production for a continuous period of several weeks, are unlikely to be eligible for EDCM credits. In any event, eligibility for EDCM credits depends on a site-specific assessment of whether the generation can be considered to have a contribution to security of supply under Engineering Recommendation P2/7.

1.24. The charges under the EDCM comprise of the following individual components:

a) **Fixed charge (pence/MPAN/day)**- This charge recovers operational costs associated with those connection assets that are provided for the 'sole' use of the Customer and a residual amount to ensure recovery of our regulated allowed revenue.

b) **Capacity charge (pence/kVA/day)** -This charge comprises the relevant FCP component, the National Grid Electricity Transmission cost and other regulated costs.

Capacity charges are levied on the MIC, MEC, and any exceeded capacity. You may wish to review your MIC or MEC periodically to ensure it remains appropriate for your needs as you may be paying for more capacity than you require. If you wish to make changes, contact us via the details in paragraph 1.13.

The FCP cost is locational and reflects our assessment of future network reinforcement necessary at the voltage of connection (local) and beyond at all higher voltages (remote) relevant to the Customer's connection. This results in the allocation of higher costs, in more capacity congested parts of the network reflecting the greater likelihood of future reinforcement in these areas and the allocation of lower costs in less congested parts of the network. The local FCP cost is included in the capacity charge.

Our regulated costs include direct and indirect operational costs. The capacity charge recovers these costs using the Customer usage profile and the relevant assets being used to transport electricity between the source substation and Customer's Metering Point.

c) **Super-red unit charge (pence/kWh**) - This charge recovers the remote FCP component. The charge is positive for import and negative for export which means you can either reduce your charges by minimising consumption or increasing export at those times. The charge is applied to consumption during the Super-red time period as detailed in Annex 2.

1.25. Future charge rates may be affected by consumption during the Super-red time period, therefore reducing consumption in the Super-red time period may be beneficial.

1.26. **Reactive Power** - The EDCM does not include a separate charge component for any reactive power flows (kVAr) for either demand or generation. However, the EDCM charges do reflect the effect on the network of the Customer's power factor, for example, unit charges can increase if your site power factor is poor (lower than 0.95). Improving your site's power factor will also reduce the maximum demand (kVA) for the same power consumed in kW thus providing scope to reduce your agreed capacity requirements.

Additional Notes

Domestic Aggregated (Related MPAN) and Non-Domestic Aggregated (Related MPAN) are supplementary, off-peak, tariffs to their standard, Domestic Aggregated and Non-Domestic Aggregated tariffs, respectively. Related MPAN, off-peak, terms are only available to Metering Points that are already on such terms and where: a) the Customer retains the original off-peak equipment and the circuits from which the off-peak supply is taken are separated from all other circuits; b) the function of the off-peak equipment is not duplicated by other equipment connected to the other circuits; and c) "off-peak equipment" means appliances such as thermal storage heaters, storage water heaters or other equipment as agreed by SEPD
Generally, Domestic DUoS tariffs are available only to premises: a) used exclusively as a single private residence; or b) comprising more than one private residence where the estimated maximum demand of the supply does not exceed 25 kW

Appendix 3 – Non-Final Demand Site Certificate

A certificate set out in the form of the example shown below should be submitted to confirm that a site qualifies as a Non-Final Demand Site.

Non-Final Demand Site Certificate of Compliance

This is to certify that the Metering System listed below qualifies as compliant with the criteria of a Non-Final Demand Site, for the purposes of Use of System charges, and that:

The property is a Single Site at which either or both Electricity Storage and/or Electricity Generation occurs (whether the facility(ies) at the site are operating or being commissioned, repaired, or decommissioned), and that:

a) has an export MPAN and an import MPAN with associated metering equipment which only measures export from Electricity Storage and/or Electricity Generation and import for or directly relating to Electricity Storage and/or Electricity Generation (and not export from another source and/or import for another activity); and
   i. if registered in an MPAS Registration System, is subject to certification from a Supplier Party that the site meets the criteria in paragraph (a) above, which certificate has been provided to the DNO/IDNO Party; or
   ii. if registered in CMRS, is subject to certification from the Customer (or its CVA Registrant) that the site meets the criteria in paragraph (a) above, which certificate has been provided to the DNO/IDNO Party.

For the purposes of this declaration, the term Non-Final Demand Site has the meaning given to it in the DCUSA.

Metering System Site Address:

Qualifying Import MPAN/MSID(s)	Qualifying Export MPAN/MSID(s)

I declare that I understand the qualification requirements and certify that the above Metering System meets the criteria of a Non-Final Demand Site.

Authorised signatory:

Name and designation:

On behalf of company:

Date:

Annex 1 - Schedule of Charges for use of the Distribution System by LV and HV Designated Properties, and Unmetered Supplies

Southern Electric Power Distribution plc - Effective from 1st April 2026 - Final LV and HV charges

Time Bands for LV and HV Designated Properties			
Time periods	**Red Time Band**	**Amber Time Band**	**Green Time Band**
Monday to Friday (Including Bank Holidays) All Year	16:30 - 19:30		
Monday to Friday (Including Bank Holidays) All Year		07:00 - 16:30 19:30 - 22:00	
Monday to Friday (Including Bank Holidays) All Year			00:00 - 07:00 22:00 - 24:00
Saturday and Sunday All Year		09:30 - 21:30	00:00 - 09:30 21:30 - 24:00
Notes	All the above times are in UK Clock time		

Time Bands for Unmetered Properties			
	Black Time Band	**Yellow Time Band**	**Green Time Band**
Monday to Friday (Including Bank Holidays) March to October Inclusive		07:00 - 22:00	
Monday to Friday (Including Bank Holidays) November to February Inclusive	16:30 - 19:30	07:00 - 16:30 19:30 - 22:00	
Monday to Friday (Including Bank Holidays) April to March Inclusive			00:00 - 07:00 22:00 - 24:00
Saturday and Sunday All Year		09:30 - 21:30	00:00 - 09:30 21:30 - 24:00
Notes	All the above times are in UK Clock time		

Tariff name	Open LLFCs / DUoS Tariff IDs	PCs	Red/black unit charge p/kWh	Amber/yellow unit charge p/kWh	Green unit charge p/kWh	Fixed charge p/MPAN/day	Capacity charge p/kVA/day	Exceeded capacity charge p/kVA/day	Reactive power charge p/kVArh	Closed LLFCs / DUoS Tariff IDs
Domestic Aggregated or CT with Residual	**100-111, 154-157, 160-161, 456, Q55**	**0, 1, 2**	**14.017**	**1.866**	**0.095**	**5.28**				**124-125**
Domestic Aggregated (Related MPAN)	**115, 121, 150-153**	**2**	**14.017**	**1.866**	**0.095**					**112-114, 116-120, 122-123**

Tariff name	Open LLFCs / DUoS Tariff IDs	PCs	Red/black unit charge p/kWh	Amber/yellow unit charge p/kWh	Green unit charge p/kWh	Fixed charge p/MPAN/day	Capacity charge p/kVA/day	Exceeded capacity charge p/kVA/day	Reactive power charge p/kVArh	Closed LLFCs / DUoS Tariff IDs
Non-Domestic Aggregated or CT No Residual	H00, H05, H10, H15, H20, H25, H30, H35, H40, H45, H50, H55, H60, H70, H75, H80, Q00, Q56	0, 3, 4, 5-8	12.061	1.606	0.082	15.47				Q35, Q40
Non-Domestic Aggregated or CT Band 1	H01, H06, H11, H16, H21, H26, H31, H36, H41, H46, H51, H56, H61, H71, H76, H81, Q01, Q57	0, 3, 4, 5-8	12.061	1.606	0.082	13.57				Q36, Q41
Non-Domestic Aggregated or CT Band 2	H02, H07, H12, H17, H22, H27, H32, H37, H42, H47, H52, H57, H62, H72, H77, H82, Q02, Q58	0, 3, 4, 5-8	12.061	1.606	0.082	3.71				Q37, Q42
Non-Domestic Aggregated or CT Band 3	H03, H08, H13, H18, H23, H28, H33, H38, H43, H48, H53, H58, H63, H73, H78, H83, Q03, Q59	0, 3, 4, 5-8	11.706	1.250	0.000	0.00				Q38, Q43
Non-Domestic Aggregated or CT Band 4	H04, H09, H14, H19, H24, H29, H34, H39, H44, H49, H54, H59, H64, H74, H79, H84, Q04, Q60	0, 3, 4, 5-8	11.422	0.966	0.000	0.00				Q39, Q44
Non-Domestic Aggregated (related MPAN)	140, 144	4	12.061	1.606	0.082					138-139, 141-143, 145

Tariff name	Open LLFCs / DUoS Tariff IDs	PCs	Red/black unit charge p/kWh	Amber/yellow unit charge p/kWh	Green unit charge p/kWh	Fixed charge p/MPAN/day	Capacity charge p/kVA/day	Exceeded capacity charge p/kVA/day	Reactive power charge p/kVArh	Closed LLFCs / DUoS Tariff IDs
LV Site Specific No Residual	H85	0	8.530	0.956	0.047	28.20	10.63	10.63	0.251	
LV Site Specific Band 1	H86	0	6.589	0.509	0.028	0.00	10.63	10.63	0.251	
LV Site Specific Band 2	H87	0	6.243	0.509	0.028	0.00	10.63	10.63	0.251	
LV Site Specific Band 3	H88	0	5.912	0.509	0.028	0.00	10.63	10.63	0.251	
LV Site Specific Band 4	H89	0	5.471	0.509	0.028	0.00	10.63	10.63	0.251	
LV Sub Site Specific No Residual	H90	0	5.804	0.447	0.019	63.52	10.35	10.35	0.138	
LV Sub Site Specific Band 1	H91	0	3.863	0.000	0.000	35.32	10.35	10.35	0.138	
LV Sub Site Specific Band 2	H92	0	3.516	0.000	0.000	35.32	10.35	10.35	0.138	
LV Sub Site Specific Band 3	H93	0	3.186	0.000	0.000	35.32	10.35	10.35	0.138	
LV Sub Site Specific Band 4	H94	0	2.745	0.000	0.000	35.32	10.35	10.35	0.138	
HV Site Specific No Residual	Q45	0	4.198	0.288	0.012	243.69	10.06	10.06	0.098	
HV Site Specific Band 1	Q46	0	1.266	0.000	0.000	0.00	10.06	10.06	0.098	
HV Site Specific Band 2	Q47	0	0.377	0.000	0.000	0.00	10.06	10.06	0.098	

Tariff name	Open LLFCs / DUoS Tariff IDs	PCs	Red/black unit charge p/kWh	Amber/yellow unit charge p/kWh	Green unit charge p/kWh	Fixed charge p/MPAN/day	Capacity charge p/kVA/day	Exceeded capacity charge p/kVA/day	Reactive power charge p/kVArh	Closed LLFCs / DUoS Tariff IDs
HV Site Specific Band 3	Q48	0	0.191	0.000	0.000	0.00	10.06	10.06	0.098	
HV Site Specific Band 4	Q49	0	0.000	0.000	0.000	0.00	10.06	10.06	0.098	
Unmetered Supplies	500-503, 520	0, 1 or 8	28.182	4.731	3.287					
LV Generation Aggregated	931	0 or 8	-8.447	-1.124	-0.057	0.00				
LV Sub Generation Aggregated	932	0 or 8	-7.262	-0.861	-0.043	0.00				
LV Generation Site Specific	1-2, 909	0	-8.447	-1.124	-0.057	0.00			0.313	
LV Generation Site Specific no RP charge	7-8	0	-8.447	-1.124	-0.057	0.00				
LV Sub Generation Site Specific	3-4	0	-7.262	-0.861	-0.043	0.00			0.230	
LV Sub Generation Site Specific no RP charge	146-147	0	-7.262	-0.861	-0.043	0.00				
HV Generation Site Specific	5-6, 910	0	-5.239	-0.404	-0.017	471.07			0.187	
HV Generation Site Specific no RP charge	148-149	0	-5.239	-0.404	-0.017	471.07				

Annex 2 - Schedule of Charges for use of the Distribution System by Designated EHV Properties (including LDNOs with Designated EHV Properties/end-users)

Note: The list of MPANs / MSIDs provided may be incomplete; the DNO reserves the right to apply the listed charges to any other MPANs / MSIDs associated with the site.

Southern Electric Power Distribution plc - Effective from 1st April 2026 - Final Designated EDCM charges

Time Periods for Designated EHV Properties	
Time periods	**Super Red Time Band**
Monday to Friday (Including Bank Holidays) November to February Inclusive	16:30 - 19:30
Notes	All the above times are in UK Clock time

Import LLFC / DUoS Tariff ID	Import MPANs/MSIDs	Export LLFC / DUoS Tariff ID	Export MPANs/MSIDs	Name	Residual Charging Band	Import Super Red unit charge (p/kWh)	Import fixed charge (p/day)	Import capacity charge (p/kVA/day)	Import exceeded capacity charge (p/kVA/day)	Export Super Red unit charge (p/kWh)	Export fixed charge (p/day)	Export capacity charge (p/kVA/day)	Export exceeded capacity charge (p/kVA/day)
700	2000027373741			Tariff 1	4	1.200	94905.92	1.53	1.53	0.000	0.00	0.00	0.00
701	2000027366674			Tariff 2	3	0.635	31385.43	2.31	2.31	0.000	0.00	0.00	0.00
702	2000027342238			Tariff 3	2	0.248	15001.89	1.15	1.15	0.000	0.00	0.00	0.00
704	2000027343640	734	2000050928900	Tariff 4		0.000	3.21	0.89	0.89	0.000	439.73	0.05	0.05
706	2000027419271	736	2000050932127	Tariff 5		0.823	15.32	0.89	0.89	0.000	704.56	0.05	0.05
707	2000027427398	737	2000050935800	Tariff 6	1	1.166	1127.12	0.94	0.94	-1.184	146.11	0.05	0.05
708	2000052675995			Tariff 7	2	0.000	17135.88	2.17	2.17	0.000	0.00	0.00	0.00
709	2000054624149	749		Tariff 8	2	1.343	7270.67	2.27	2.27	0.000	87.74	0.05	0.05

Import LLFC / DUoS Tariff ID	Import MPANs/MSIDs	Export LLFC / DUoS Tariff ID	Export MPANs/MSIDs	Name	Residual Charging Band	Import Super Red unit charge (p/kWh)	Import fixed charge (p/day)	Import capacity charge (p/kVA/day)	Import exceeded capacity charge (p/kVA/day)	Export Super Red unit charge (p/kWh)	Export fixed charge (p/day)	Export capacity charge (p/kVA/day)	Export exceeded capacity charge (p/kVA/day)
710	2000027387210, 2000054817604, 2000055899218	740	2000055899236, 2000055899245, 2000055205806	Tariff 9	4	0.000	88211.08	0.97	0.97	0.000	7046.86	0.05	0.05
711	2000027852497			Tariff 10	2	0.000	18225.44	2.47	2.47	0.000	0.00	0.00	0.00
712	2000055085297			Tariff 11	3	0.842	23763.18	1.55	1.55	0.000	0.00	0.00	0.00
713	2000055085302			Tariff 12		0.859	15807.09	1.72	1.72	0.000	0.00	0.00	0.00
714	2000027366665			Tariff 13	4	1.341	73288.91	2.21	2.21	0.000	0.00	0.00	0.00
715	2000051063430			Tariff 14	2	0.626	6845.15	4.62	4.62	0.000	0.00	0.00	0.00
716	2000027366762			Tariff 15	1	0.000	1139.91	3.34	3.34	0.000	0.00	0.00	0.00
717	2000027373403			Tariff 16	1	0.875	1139.91	3.11	3.11	0.000	0.00	0.00	0.00
718	2000050571060	738	2000051080338	Tariff 17	3	0.891	19526.75	1.51	1.51	0.000	1841.26	0.05	0.05
719	2000027419449			Tariff 18	1	1.608	1139.91	1.82	1.82	0.000	0.00	0.00	0.00
800	2000050277851			Tariff 19	3	0.913	18673.12	1.73	1.73	0.000	0.00	0.00	0.00
801	2000050393707			Tariff 20	3	0.000	18673.12	1.72	1.72	0.000	0.00	0.00	0.00
802	2000027366841			Tariff 21	1	0.398	1333.66	2.66	2.66	0.000	0.00	0.00	0.00
803	2000050277513			Tariff 22	1	0.000	2397.67	1.65	1.65	0.000	0.00	0.00	0.00
817	2000050481327			Tariff 23		0.000	1043.31	1.73	1.73	0.000	0.00	0.00	0.00
837	2000050481309			Tariff 24		0.000	1043.31	2.58	2.58	0.000	0.00	0.00	0.00
804	2000050275631, 2000056717878, 2000056717887			Tariff 25	4	0.000	74049.56	1.68	1.68	0.000	0.00	0.00	0.00
805	2000027474820			Tariff 26	1	0.000	1335.02	1.61	1.61	0.000	0.00	0.00	0.00
806	2000027454188			Tariff 27	2	0.000	7687.75	1.85	1.85	0.000	0.00	0.00	0.00
807	2000027454452			Tariff 28	2	0.000	7123.11	1.96	1.96	0.000	0.00	0.00	0.00
808	2000052503790			Tariff 29	3	0.608	18673.12	2.02	2.02	0.000	0.00	0.00	0.00

Import LLFC / DUoS Tariff ID	Import MPANs/MSIDs	Export LLFC / DUoS Tariff ID	Export MPANs/MSIDs	Name	Residual Charging Band	Import Super Red unit charge (p/kWh)	Import fixed charge (p/day)	Import capacity charge (p/kVA/day)	Import exceeded capacity charge (p/kVA/day)	Export Super Red unit charge (p/kWh)	Export fixed charge (p/day)	Export capacity charge (p/kVA/day)	Export exceeded capacity charge (p/kVA/day)
809	2000027297816			Tariff 30	2	0.000	7203.48	0.91	0.91	0.000	0.00	0.00	0.00
810	2000050467030	918	2000027292534	Tariff 31	2	0.000	9293.14	1.24	1.24	0.000	2734.66	0.05	0.05
811	2000051063927			Tariff 32	3	0.000	18212.67	4.56	4.56	0.000	0.00	0.00	0.00
812	2000050544330			Tariff 34	1	0.229	1009.54	1.76	1.76	0.000	0.00	0.00	0.00
813	2000055209191, 2000055209207, 2000055209216, 2000055209225, 2000055209234, 2000055209252, 2000055209243, 2000057677472, 2000057682445, 2000060517798			Tariff 35	4	0.000	80666.15	3.55	3.55	0.000	0.00	0.00	0.00
814	2000027340036	929	2000054899591	Tariff 36	1	0.244	1440.88	0.95	0.95	0.000	676.26	0.05	0.05
815	2000027454648	924	2000054397290	Tariff 37	3	0.000	20518.91	1.24	1.24	0.000	1369.91	0.05	0.05
816	2000027306995	937	2000050795630	Tariff 38	2	0.000	7264.97	3.53	3.53	0.000	883.12	0.05	0.05
818	2000050277160			Tariff 39	4	0.000	127010.35	2.50	2.50	0.000	0.00	0.00	0.00
819	2000027466068			Tariff 40	1	0.000	1143.99	2.85	2.85	0.000	0.00	0.00	0.00
7174	7174	7174	7174	Tariff 41		0.000	256.11	0.91	0.91	0.000	0.00	0.00	0.00
823	2000053759147	923	2000053759174	Tariff 43	2	0.000	6771.09	0.86	0.86	0.000	1943.27	0.05	0.05
824	2000027366498			Tariff 44	3	1.411	30392.29	2.69	2.69	0.000	0.00	0.00	0.00
825	2000027323866	933		Tariff 45	2	0.000	20630.76	3.33	3.33	0.000	12438.89	0.05	0.05
826	2000027318634			Tariff 46	2	0.000	16071.15	1.59	1.59	0.000	0.00	0.00	0.00
827	2000052503805			Tariff 47	3	0.385	18673.12	1.98	1.98	0.000	0.00	0.00	0.00

Import LLFC / DUoS Tariff ID	Import MPANs/MSIDs	Export LLFC / DUoS Tariff ID	Export MPANs/MSIDs	Name	Residual Charging Band	Import Super Red unit charge (p/kWh)	Import fixed charge (p/day)	Import capacity charge (p/kVA/day)	Import exceeded capacity charge (p/kVA/day)	Export Super Red unit charge (p/kWh)	Export fixed charge (p/day)	Export capacity charge (p/kVA/day)	Export exceeded capacity charge (p/kVA/day)
829	2000050275552			Tariff 49	4	0.000	81486.47	1.58	1.58	0.000	0.00	0.00	0.00
820	2000052993042			Tariff 50		0.823	317.92	1.05	1.05	0.000	0.00	0.00	0.00
830	2000050277986			Tariff 51	4	0.000	107517.82	1.41	1.41	0.000	0.00	0.00	0.00
854	2000052369584			Tariff 52	4	0.000	101983.04	2.67	2.67	0.000	0.00	0.00	0.00
835	2000050275543			Tariff 53	4	0.000	76044.94	1.92	1.92	0.000	0.00	0.00	0.00
836	2000051425787			Tariff 54	2	0.000	7667.07	3.41	3.41	0.000	0.00	0.00	0.00
4033	4033	4032	4032	Tariff 55		0.000	0.23	2.03	2.03	0.000	11.56	0.05	0.05
4548	4548	4548	4548	Tariff 56		0.000	0.04	1.43	1.43	0.000	11.75	0.05	0.05
839	2000053874062	925	2000053874080	Tariff 57		0.000	2.88	1.28	1.28	0.000	403.23	0.05	0.05
505	2000053874105	521	2000053874123	Tariff 58		0.000	4.32	1.19	1.19	0.000	590.34	0.05	0.05
840	2000051011929	930	2000051034322	Tariff 59		0.000	74.43	0.90	0.90	0.000	3721.70	0.05	0.05
7393	7393	7390	7390	Tariff 60	1	0.902	1015.35	0.99	0.99	0.000	546.72	0.05	0.05
7394	7394	7391	7391	Tariff 61	1	0.000	1013.18	1.12	1.12	0.000	548.88	0.05	0.05
844	2000027491213	917	2000050932697	Tariff 62		0.000	25.30	0.88	0.88	0.000	1771.02	0.05	0.05
844	2000050044320	917	2000051079954	Tariff 63		0.000	24.50	0.86	0.86	0.000	514.40	0.05	0.05
844	2000052468930	917	2000052231228	Tariff 64		0.000	2.30	0.87	0.87	0.000	0.00	0.00	0.00
845	2000050437959			Tariff 65	2	0.000	12154.24	2.28	2.28	0.000	0.00	0.00	0.00
846	2000050552457	927	2000050570312	Tariff 66		1.582	4.87	0.85	0.85	0.000	243.33	0.05	0.05
847	2000050662007	928	2000050662016	Tariff 67	2	0.000	6644.73	1.00	1.00	0.000	604.98	0.05	0.05
849	2000052866920			Tariff 68	2	0.000	12949.97	3.66	3.66	0.000	0.00	0.00	0.00
851	2000051336018			Tariff 69	2	0.000	7932.53	2.12	2.12	0.000	0.00	0.00	0.00
853	2000052659600	938	2000052659585	Tariff 70	1	0.000	1309.45	0.85	0.85	0.000	0.00	0.00	0.00
855	2000050276556			Tariff 71	2	0.415	7123.11	1.34	1.34	0.000	0.00	0.00	0.00
856	2000054315483			Tariff 72	3	0.000	18108.49	1.88	1.88	0.000	0.00	0.00	0.00

Import LLFC / DUoS Tariff ID	Import MPANs/MSIDs	Export LLFC / DUoS Tariff ID	Export MPANs/MSIDs	Name	Residual Charging Band	Import Super Red unit charge (p/kWh)	Import fixed charge (p/day)	Import capacity charge (p/kVA/day)	Import exceeded capacity charge (p/kVA/day)	Export Super Red unit charge (p/kWh)	Export fixed charge (p/day)	Export capacity charge (p/kVA/day)	Export exceeded capacity charge (p/kVA/day)
857	2000054359392			Tariff 73	3	0.000	17870.93	2.05	2.05	0.000	0.00	0.00	0.00
858	2000051445019	921	2000051445143	Tariff 74		0.250	4.92	1.15	1.15	0.000	541.93	0.05	0.05
859	2000054431783	922	2000054431792	Tariff 75		0.000	16.01	0.85	0.85	0.000	320.22	0.05	0.05
860	2000054674344	939	2000054674353	Tariff 76		0.000	297.83	1.30	1.30	0.000	3309.17	0.05	0.05
7303	7303			Tariff 77	3	0.213	17543.85	3.43	3.43	0.000	0.00	0.00	0.00
863	2000055109274	941	2000055109283	Tariff 78	1	0.000	1007.36	4.40	4.40	0.000	388.24	0.05	0.05
852	2000055132440	926	2000055132450	Tariff 79		0.000	3.85	1.48	1.48	0.000	385.16	0.05	0.05
862	2000055138985	940	2000055138762	Tariff 80		0.000	1.55	1.44	1.44	0.000	387.46	0.05	0.05
864	2000055125815	942	2000055125824	Tariff 81		0.226	8.57	1.82	1.82	0.000	771.29	0.05	0.05
865	2000055125842	943	2000055125833	Tariff 82		0.226	3.79	2.37	2.37	0.000	1137.76	0.05	0.05
866	2000055213940	944	2000055213969	Tariff 83	1	0.226	1008.39	2.43	2.43	0.000	540.62	0.05	0.05
861	2000055029502			Tariff 84	4	0.000	72488.97	2.49	2.49	0.000	0.00	0.00	0.00
861	2000055029511			Tariff 85		0.000	133.32	2.37	2.37	0.000	0.00	0.00	0.00
861	2000055029520			Tariff 86		0.000	133.32	2.20	2.20	0.000	0.00	0.00	0.00
861	2000055029530			Tariff 87		0.000	133.32	2.35	2.35	0.000	0.00	0.00	0.00
861	2000055029549			Tariff 88		0.000	133.32	2.41	2.41	0.000	0.00	0.00	0.00
861	2000055029558			Tariff 89		0.000	133.32	2.19	2.19	0.000	0.00	0.00	0.00
7096	7096	7081	7081	Tariff 90	4	0.000	80820.20	2.32	2.32	0.000	9228.27	0.05	0.05
		7095	7095	Tariff 91		0.000	0.00	0.00	0.00	0.000	6683.95	0.05	0.05
7098	7098			Tariff 92		0.000	11.79	2.52	2.52	0.000	0.00	0.00	0.00
7097	7097			Tariff 93		0.000	26841.44	2.18	2.18	0.000	0.00	0.00	0.00
833	2000051300396			Tariff 95	4	0.000	81464.06	1.97	1.97	0.000	0.00	0.00	0.00
867	2000055426205	946	2000055426214	Tariff 96		0.000	5.56	1.44	1.44	0.000	555.89	0.05	0.05
868	2000055426232	947	2000055426241	Tariff 97		0.000	12.64	1.51	1.51	0.000	1264.01	0.05	0.05

Import LLFC / DUoS Tariff ID	Import MPANs/MSIDs	Export LLFC / DUoS Tariff ID	Export MPANs/MSIDs	Name	Residual Charging Band	Import Super Red unit charge (p/kWh)	Import fixed charge (p/day)	Import capacity charge (p/kVA/day)	Import exceeded capacity charge (p/kVA/day)	Export Super Red unit charge (p/kWh)	Export fixed charge (p/day)	Export capacity charge (p/kVA/day)	Export exceeded capacity charge (p/kVA/day)
7484	7484	7485	7485	Tariff 98		0.000	3.78	1.98	1.98	0.000	907.21	0.05	0.05
870	2000055580574	949	2000055580583	Tariff 99		0.000	6.42	1.55	1.55	0.000	898.99	0.05	0.05
872	2000055580592	611	2000055580608	Tariff 101		0.000	9.20	1.17	1.17	0.000	552.24	0.05	0.05
873	2000055582785	612	2000055582794	Tariff 102		0.226	9.01	2.91	2.91	0.000	1802.71	0.05	0.05
874	2000055634982	613	2000055634991	Tariff 103		0.000	5.79	1.69	1.69	0.000	579.36	0.05	0.05
875	2000055643198	614	2000055643203	Tariff 104		0.227	4.29	2.47	2.47	0.000	557.16	0.05	0.05
705	2000051981890			Tariff 105	3	0.000	17810.50	2.14	2.14	0.000	0.00	0.00	0.00
876	2000055872892	615	2000055872917	Tariff 106		0.226	5.58	1.95	1.95	0.000	1338.32	0.05	0.05
877	2000055600255	616	2000055600291	Tariff 107		0.000	21.83	1.17	1.17	0.000	1025.79	0.05	0.05
878	2000055600194	617	2000055600200	Tariff 108		0.221	17.63	1.28	1.28	0.000	994.16	0.05	0.05
880	2000055918093	619	2000055918109	Tariff 110		0.000	4.64	1.28	1.28	0.000	556.81	0.05	0.05
881	2000055969256	620	2000055969265	Tariff 111		1.254	5.62	1.94	1.94	0.000	1124.67	0.05	0.05
882	2000055600352	621	2000055600399	Tariff 112		0.000	5.56	1.40	1.40	0.000	555.89	0.05	0.05
883	2000055582767	622	2000055582776	Tariff 113		0.000	24.68	1.48	1.48	0.000	2468.47	0.05	0.05
884	2000056041495	623	2000056041510	Tariff 114		0.613	27.24	1.30	1.30	0.000	4766.75	0.05	0.05
349	2000056041500	504	2000056041529	Tariff 115		0.610	27.24	1.49	1.49	0.000	4766.75	0.05	0.05
885	2000055916254	624	2000055916263	Tariff 116		0.000	5.25	1.93	1.93	0.000	1575.38	0.05	0.05
886	2000055860113	625	2000055860122	Tariff 117		0.226	4.34	2.40	2.40	0.000	345.26	0.05	0.05
888	2000055899574	627	2000055899583	Tariff 119		0.226	2.94	1.54	1.54	0.000	558.51	0.05	0.05

Import LLFC / DUoS Tariff ID	Import MPANs/MSIDs	Export LLFC / DUoS Tariff ID	Export MPANs/MSIDs	Name	Residual Charging Band	Import Super Red unit charge (p/kWh)	Import fixed charge (p/day)	Import capacity charge (p/kVA/day)	Import exceeded capacity charge (p/kVA/day)	Export Super Red unit charge (p/kWh)	Export fixed charge (p/day)	Export capacity charge (p/kVA/day)	Export exceeded capacity charge (p/kVA/day)
889	2000055899529	628	2000055899538	Tariff 120		0.000	30.91	1.42	1.42	0.000	3256.26	0.05	0.05
890	2000056041556	629	2000056041565	Tariff 121		0.000	68.20	1.27	1.27	0.000	3450.06	0.05	0.05
834	SHP 1	914	SHP 2	Tariff 122	4	0.000	77843.42	2.58	2.58	0.000	1640.90	0.05	0.05
891	2000056235458			Tariff 123	2	0.000	10241.17	3.45	3.45	0.000	0.00	0.00	0.00
892	2000055582800	630	2000055582819	Tariff 124		0.000	2.24	2.62	2.62	0.000	559.21	0.05	0.05
893	2000056442147	631	2000056442156	Tariff 125		0.000	4.15	1.38	1.38	0.000	255.62	0.05	0.05
894	2000055894939	632	2000055894948	Tariff 126		0.000	2.07	2.50	2.50	0.000	559.38	0.05	0.05
895	2000055630116	633	2000055630125	Tariff 127		0.000	6.08	1.86	1.86	0.000	382.93	0.05	0.05
896	2000055845773	634	2000055845782	Tariff 128		1.226	3.28	1.38	1.38	0.000	385.73	0.05	0.05
720	2000055856970	635	2000055856989	Tariff 129		0.000	9.03	3.75	3.75	0.000	2709.29	0.05	0.05
848	2000056875315	648	2000056875324	Tariff 131		0.171	98.82	0.89	0.89	0.000	1242.36	0.05	0.05
722	2000027480851	637	-	Tariff 132	1	0.000	2549.57	0.85	0.85	0.000	4262.40	0.05	0.05
724	2000055874997	639	2000055875003	Tariff 134		0.000	36.02	0.85	0.85	0.000	2113.45	0.05	0.05
725	2000055996659	640	2000055996668	Tariff 135		0.000	8.20	1.14	1.14	0.000	553.25	0.05	0.05
726	2000055627860	641	2000055627888	Tariff 136		0.609	6.67	1.22	1.22	0.000	382.34	0.05	0.05
727	2000055899788	642	2000055899797	Tariff 137		0.222	20.05	1.23	1.23	0.000	1222.83	0.05	0.05

Import LLFC / DUoS Tariff ID	Import MPANs/MSIDs	Export LLFC / DUoS Tariff ID	Export MPANs/MSIDs	Name	Residual Charging Band	Import Super Red unit charge (p/kWh)	Import fixed charge (p/day)	Import capacity charge (p/kVA/day)	Import exceeded capacity charge (p/kVA/day)	Export Super Red unit charge (p/kWh)	Export fixed charge (p/day)	Export capacity charge (p/kVA/day)	Export exceeded capacity charge (p/kVA/day)
831	2000055924005	645	2000055924014	Tariff 138		0.000	29.23	1.54	1.54	0.000	2689.09	0.05	0.05
832	2000055878690	646	2000055878705	Tariff 139		0.228	5.04	4.08	4.08	0.000	1294.13	0.05	0.05
Y00	2000056762133	Z00	2000056762142	Tariff 140		0.205	15.65	1.03	1.03	0.000	1564.98	0.05	0.05
850	2000055901285	649	2000055901300	Tariff 143		0.000	13.65	1.12	1.12	0.000	491.50	0.05	0.05
661	2000055901346	911	2000055901355	Tariff 144		0.000	8.64	1.21	1.21	0.000	552.81	0.05	0.05
662	2000055899389	912	2000055899398	Tariff 146		0.227	10.78	1.86	1.86	0.000	1724.76	0.05	0.05
452	2000056479100	952	2000056479110	Tariff 147		0.207	33.23	1.33	1.33	0.000	2953.52	0.05	0.05
663	2000055858718	913	2000055858727	Tariff 148		0.228	5.28	1.86	1.86	0.000	1160.95	0.05	0.05
Y29	2000056951250	Z29	2000056951269	Tariff 149		0.000	1156.19	0.98	0.98	0.000	10672.55	0.05	0.05
458	2000056277271	958	2000056277280	Tariff 151		0.000	16.25	1.48	1.48	0.000	545.19	0.05	0.05
596	2000056113290	626	2000056113323	Tariff 152		0.820	5.56	1.49	1.49	0.000	555.89	0.05	0.05
597	2000056188505	607	2000056212628	Tariff 153		0.000	6.11	1.88	1.88	0.000	555.34	0.05	0.05
665	2000055924023	915	2000055924032	Tariff 154		0.000	27.73	1.53	1.53	0.000	1552.90	0.05	0.05
598	2000056127229	608	2000056127292	Tariff 155		0.210	9.49	2.83	2.83	0.000	2106.21	0.05	0.05
459	2000056455252	959	2000056455270	Tariff 156		0.225	8.14	1.32	1.32	0.000	553.31	0.05	0.05
599	2000056021300	609	2000056021319	Tariff 158		0.227	69.10	1.63	1.63	0.000	6909.53	0.05	0.05
666	2000055815004	916	2000055815013	Tariff 160		0.225	37.78	1.36	1.36	0.000	2455.38	0.05	0.05
460	2000056244977	960	2000056244986	Tariff 161		0.219	14.58	0.99	0.99	0.000	546.87	0.05	0.05

Import LLFC / DUoS Tariff ID	Import MPANs/MSIDs	Export LLFC / DUoS Tariff ID	Export MPANs/MSIDs	Name	Residual Charging Band	Import Super Red unit charge (p/kWh)	Import fixed charge (p/day)	Import capacity charge (p/kVA/day)	Import exceeded capacity charge (p/kVA/day)	Export Super Red unit charge (p/kWh)	Export fixed charge (p/day)	Export capacity charge (p/kVA/day)	Export exceeded capacity charge (p/kVA/day)
650	2000056148799	600	2000056148804	Tariff 162		0.617	11.28	2.78	2.78	0.000	2256.70	0.05	0.05
651	2000056082126	601	2000056082135	Tariff 164		1.265	2.15	2.45	2.45	0.000	754.13	0.05	0.05
652	2000056194252	602	2000056194261	Tariff 165		0.000	19.82	1.13	1.13	0.000	654.21	0.05	0.05
667	2000055881610	647	2000055881629	Tariff 167		1.275	13.24	1.76	1.76	0.000	1567.39	0.05	0.05
465	2000056474803	954	2000056474812	Tariff 168		0.000	16.82	1.11	1.11	0.000	1682.32	0.05	0.05
653	2000056179477	603	2000056179495	Tariff 169		0.812	11.37	1.34	1.34	0.000	1000.42	0.05	0.05
654	2000056205295	604	2000056205310	Tariff 170		0.224	10.63	1.56	1.56	0.000	1652.25	0.05	0.05
656	2000056199942	636	2000056199951	Tariff 171		0.226	6.87	1.78	1.78	0.000	749.41	0.05	0.05
664	2000056063709	964	2000056063718	Tariff 173		0.000	31.88	1.21	1.21	0.000	2312.43	0.05	0.05
524	2000056300470	404	2000056300489	Tariff 174		0.000	2.25	2.19	2.19	0.000	559.20	0.05	0.05
675	2000055907808	945	2000055907817	Tariff 175		0.817	3.35	2.06	2.06	0.000	558.10	0.05	0.05
676	2000055904773	936	2000055904782	Tariff 176		0.000	6.17	1.71	1.71	0.000	555.28	0.05	0.05
681	2000055926119	781	2000055926128	Tariff 177		0.236	35.42	1.05	1.05	0.000	833.44	0.05	0.05
668	2000056199766	968	2000056199793	Tariff 178	1	0.224	1043.07	0.89	0.89	0.000	2112.99	0.05	0.05
670	2000056222885	970	2000056222894	Tariff 179		0.605	11.12	1.11	1.11	0.000	550.33	0.05	0.05
671	2000056002307	971	2000056002316	Tariff 180		0.000	18.33	1.74	1.74	0.000	4032.52	0.05	0.05
677	2000055904791	777	2000055904807	Tariff 181		0.000	8.30	0.97	0.97	0.000	553.15	0.05	0.05
678	2000055916272	778	2000055916281	Tariff 182		1.180	9.20	1.43	1.43	0.000	552.24	0.05	0.05

Import LLFC / DUoS Tariff ID	Import MPANs/MSIDs	Export LLFC / DUoS Tariff ID	Export MPANs/MSIDs	Name	Residual Charging Band	Import Super Red unit charge (p/kWh)	Import fixed charge (p/day)	Import capacity charge (p/kVA/day)	Import exceeded capacity charge (p/kVA/day)	Export Super Red unit charge (p/kWh)	Export fixed charge (p/day)	Export capacity charge (p/kVA/day)	Export exceeded capacity charge (p/kVA/day)
679	2000055891167	779	2000055891176	Tariff 184		0.618	17.96	1.65	1.65	0.000	1793.77	0.05	0.05
672	2000056147378	972	2000056147387	Tariff 185		0.000	7.82	5.02	5.02	0.000	3474.19	0.05	0.05
680	2000055908537	780	2000055908546	Tariff 186		0.000	3.70	1.23	1.23	0.000	385.31	0.05	0.05
674	2000056049271	974	2000056049280	Tariff 187		0.000	3.73	1.26	1.26	0.000	385.28	0.05	0.05
682	2000056049305	782	2000056049314	Tariff 188		0.000	3.92	1.28	1.28	0.000	385.10	0.05	0.05
Y01	2000056827906	Z01	2000056827915	Tariff 189	1	0.000	1027.75	0.99	0.99	0.000	367.85	0.05	0.05
683	2000056169804	783	2000056169822	Tariff 190		0.616	5.51	2.23	2.23	0.000	1201.11	0.05	0.05
684	2000056179662	784	2000056179680	Tariff 191		0.000	2.84	1.73	1.73	0.000	673.89	0.05	0.05
685	2000056107107	785	2000056107125	Tariff 192		0.000	4.15	2.05	2.05	0.000	557.30	0.05	0.05
686	2000056113954	786	2000056113963	Tariff 194		0.227	5.09	2.25	2.25	0.000	556.36	0.05	0.05
687	2000056138132	787	2000056138160	Tariff 196		0.227	1.87	2.17	2.17	0.000	559.58	0.05	0.05
688	2000056167913	788	2000056167922	Tariff 198		0.616	0.81	3.25	3.25	0.000	388.20	0.05	0.05
525	2000056537756	956	2000056537783	Tariff 199		0.209	26.52	1.97	1.97	0.000	4685.72	0.05	0.05
689	2000055874960	789	2000055874979, 2000060638456	Tariff 201	2	0.000	8239.51	0.93	0.93	0.000	11795.26	0.05	0.05
690	2000056147225	790	2000056147261	Tariff 202		0.000	7.20	1.73	1.73	0.000	1199.42	0.05	0.05
691	2000055932200	791	2000055932238	Tariff 205		0.000	1.12	5.42	5.42	0.000	560.33	0.05	0.05

Import LLFC / DUoS Tariff ID	Import MPANs/MSIDs	Export LLFC / DUoS Tariff ID	Export MPANs/MSIDs	Name	Residual Charging Band	Import Super Red unit charge (p/kWh)	Import fixed charge (p/day)	Import capacity charge (p/kVA/day)	Import exceeded capacity charge (p/kVA/day)	Export Super Red unit charge (p/kWh)	Export fixed charge (p/day)	Export capacity charge (p/kVA/day)	Export exceeded capacity charge (p/kVA/day)
729	2000055373760, 2000055373779, 2000055373788, 2000055373797, 2000055373802, 2000055373811, 2000055373820, 2000055373830, 2000056698230, 2000056698240, 2000056698259, 2000056698268, 2000056698277, 2000056698286, 2000056793498, 2000056793503, 2000058020371			Tariff 206	4	0.791	92967.64	1.63	1.63	0.000	0.00	0.00	0.00
527	2000056441375	962	2000056441384	Tariff 208		0.000	6.16	1.06	1.06	0.000	667.87	0.05	0.05
692	2000056204956	792	2000056204965	Tariff 209		0.000	71.45	1.72	1.72	0.000	8335.34	0.05	0.05
528	2000056213152	618	2000056439613	Tariff 212		0.000	9.63	1.81	1.81	0.000	2619.33	0.05	0.05
693	2000056147396	793	2000056147401	Tariff 213		0.618	1.78	2.77	2.77	0.000	559.67	0.05	0.05
529	2000056359669	989	2000056359863	Tariff 214		0.000	28.99	1.81	1.81	0.000	4058.12	0.05	0.05
694	2000056202391	794	2000056202407	Tariff 215		0.811	22.69	1.17	1.17	0.000	2126.79	0.05	0.05
585	2000056452109	963	2000056452118	Tariff 218		0.226	10.38	1.52	1.52	0.000	776.24	0.05	0.05

Import LLFC / DUoS Tariff ID	Import MPANs/MSIDs	Export LLFC / DUoS Tariff ID	Export MPANs/MSIDs	Name	Residual Charging Band	Import Super Red unit charge (p/kWh)	Import fixed charge (p/day)	Import capacity charge (p/kVA/day)	Import exceeded capacity charge (p/kVA/day)	Export Super Red unit charge (p/kWh)	Export fixed charge (p/day)	Export capacity charge (p/kVA/day)	Export exceeded capacity charge (p/kVA/day)
695	2000056186400	795	2000056186438	Tariff 219		0.000	49.70	1.58	1.58	0.000	10211.05	0.05	0.05
696	2000056166440	796	2000056166469	Tariff 220		0.000	61.50	2.02	2.02	0.000	4920.35	0.05	0.05
Y02	2000056792652	Z02	2000056792661	Tariff 222		0.000	3.03	0.86	0.86	0.000	727.29	0.05	0.05
595	2000056384832	980	2000056384850	Tariff 225	1	0.000	1027.07	1.02	1.02	0.000	676.06	0.05	0.05
655	2000056536112	955	2000056536121	Tariff 227		0.000	15.25	1.31	1.31	0.000	3543.98	0.05	0.05
657	2000056456256	957	2000056456265	Tariff 228		0.000	35.36	0.89	0.89	0.000	353.65	0.05	0.05
659	2000056439998	999	2000056440006	Tariff 229		0.000	5.51	1.20	1.20	0.000	516.69	0.05	0.05
660	2000056420339	450	2000056420348	Tariff 230		0.804	9.77	1.66	1.66	0.000	664.26	0.05	0.05
697	2000056202416	797	2000056202425	Tariff 233		0.000	12.98	2.49	2.49	0.000	998.80	0.05	0.05
Y49	2000060046760	Z49	2000060046797	Tariff 234		0.000	97.15	1.42	1.42	0.000	20206.45	0.05	0.05
669	2000056532456	369	2000056532483	Tariff 235		0.225	16.23	1.04	1.04	0.000	714.10	0.05	0.05
7311	7311	7310	7310	Tariff 238		0.650	106.20	1.11	1.11	0.000	1592.94	0.05	0.05
698	2000056199613	798	2000056199701	Tariff 240		0.000	119.03	0.89	0.89	0.000	892.75	0.05	0.05
699	2000056191526	799	2000056191535	Tariff 244		0.000	38.26	2.89	2.89	0.000	11517.22	0.05	0.05
703	2000056580947, 2000056580956			Tariff 246	3	0.000	66533.27	1.36	1.36	0.000	0.00	0.00	0.00
730	2000056058754	741	2000056058763	Tariff 247		0.000	2.96	0.96	0.96	0.000	130.36	0.05	0.05
731	2000056151106	742	2000056151115	Tariff 248	1	0.000	1057.37	0.89	0.89	0.000	82.53	0.05	0.05
732	2000056098818	743	2000056098827	Tariff 249		0.000	2.61	1.09	1.09	0.000	130.71	0.05	0.05

Import LLFC / DUoS Tariff ID	Import MPANs/MSIDs	Export LLFC / DUoS Tariff ID	Export MPANs/MSIDs	Name	Residual Charging Band	Import Super Red unit charge (p/kWh)	Import fixed charge (p/day)	Import capacity charge (p/kVA/day)	Import exceeded capacity charge (p/kVA/day)	Export Super Red unit charge (p/kWh)	Export fixed charge (p/day)	Export capacity charge (p/kVA/day)	Export exceeded capacity charge (p/kVA/day)
673	2000056551324	403	2000056551333	Tariff 250		0.000	29.69	1.90	1.90	0.000	3562.95	0.05	0.05
721	2000056562292	451	2000056562317	Tariff 251		0.000	653.67	0.90	0.90	0.000	5477.73	0.05	0.05
728	2000056194191	978	2000056194207	Tariff 252		0.227	6.07	2.39	2.39	0.000	2338.24	0.05	0.05
901	2000056139215	991	2000056139224	Tariff 253		0.619	13.37	5.80	5.80	0.000	7577.95	0.05	0.05
904	2000056219952	994	2000056219980	Tariff 254		0.000	354.75	0.86	0.86	0.000	319.28	0.05	0.05
905	2000056200010	995	2000056200029	Tariff 255		0.817	4.67	1.97	1.97	0.000	669.36	0.05	0.05
906	2000056138977	996	2000056139001	Tariff 256		0.000	3.72	1.56	1.56	0.000	670.31	0.05	0.05
907	2000056212033	997	2000056212042	Tariff 257		0.000	58.93	0.95	0.95	0.000	1071.37	0.05	0.05
908	2000056139395	998	2000056139438	Tariff 258		1.264	27.31	2.10	2.10	0.000	11608.15	0.05	0.05
723	2000056530788	953	2000056530797	Tariff 260		0.000	170.79	1.22	1.22	0.000	20708.42	0.05	0.05
765	2000056469176	983	2000056469185	Tariff 262		1.140	24.68	1.00	1.00	0.000	987.11	0.05	0.05
Y03	2000056842124	Z03	2000056842133	Tariff 264		0.227	2.88	2.82	2.82	0.000	671.16	0.05	0.05
7492	7492	7493	7493	Tariff 265		0.823	17.09	1.07	1.07	0.000	683.61	0.05	0.05
746	2000056488513	748	2000056488531	Tariff 269		0.000	1.47	1.25	1.25	0.000	785.14	0.05	0.05
Y05	2000056866055	Z05	2000056866064	Tariff 270		0.000	10.30	1.06	1.06	0.000	663.74	0.05	0.05
766	2000056537213	966	2000056537222	Tariff 275		0.814	23.13	1.34	1.34	0.000	1901.18	0.05	0.05
Y06	2000056521960	Z06	2000056522003	Tariff 276		0.869	16.31	1.55	1.55	0.000	372.71	0.05	0.05
Y26	2000056839896	Z26	2000056839901	Tariff 277		0.207	8.06	1.31	1.31	0.000	665.97	0.05	0.05

Import LLFC / DUoS Tariff ID	Import MPANs/MSIDs	Export LLFC / DUoS Tariff ID	Export MPANs/MSIDs	Name	Residual Charging Band	Import Super Red unit charge (p/kWh)	Import fixed charge (p/day)	Import capacity charge (p/kVA/day)	Import exceeded capacity charge (p/kVA/day)	Export Super Red unit charge (p/kWh)	Export fixed charge (p/day)	Export capacity charge (p/kVA/day)	Export exceeded capacity charge (p/kVA/day)
841	2000060018140	919	2000060018150	Tariff 279		0.804	35.82	1.42	1.42	0.000	1094.48	0.05	0.05
767	2000056535670	467	2000056535740	Tariff 280		0.000	5.58	1.34	1.34	0.000	837.33	0.05	0.05
768	2000056345452	468	2000056345461	Tariff 283		0.000	34.52	0.97	0.97	0.000	1208.35	0.05	0.05
Y07	2000056520910	Z07	2000056520957	Tariff 284		0.864	16.31	1.55	1.55	0.000	372.71	0.05	0.05
Y27	2000056860080	Z27	2000056860090	Tariff 286		1.009	27.98	1.30	1.30	0.000	1119.38	0.05	0.05
769	2000056495496, 2000056496295	984	2000056495501, 2000056496300	Tariff 291		0.225	5.48	1.15	1.15	0.000	383.53	0.05	0.05
Y08	2000056865497	Z08	2000056865479	Tariff 292		0.000	27.08	1.08	1.08	0.000	984.71	0.05	0.05
771	2000056477646	951	2000056477682	Tariff 293		0.226	8.32	1.21	1.21	0.000	665.71	0.05	0.05
7490	7490	7491	7491	Tariff 294		0.000	24.68	1.15	1.15	0.000	987.11	0.05	0.05
7496	7496	7497	7497	Tariff 295		0.000	54.39	1.12	1.12	0.000	2289.92	0.05	0.05
Y10	2000056474868	Z10	2000056474877	Tariff 296		0.000	33.86	1.42	1.42	0.000	3755.18	0.05	0.05
774	2000056474380	644	2000056474399	Tariff 300		0.000	1.94	1.84	1.84	0.000	387.08	0.05	0.05
Y11	2000056631430	Z11	2000056631440	Tariff 301		0.000	1.94	1.67	1.67	0.000	387.08	0.05	0.05
733	2000056705135	744	2000056705144	Tariff 304		0.000	62.72	1.80	1.80	0.000	2850.43	0.05	0.05
775	2000056366860	986	2000056366930	Tariff 305		0.000	13.22	1.56	1.56	0.000	660.82	0.05	0.05
Y12	2000056623634, 2000056638213	933		Tariff 306	3	0.245	18305.19	1.53	1.53	0.000	16.69	0.05	0.05

Import LLFC / DUoS Tariff ID	Import MPANs/MSIDs	Export LLFC / DUoS Tariff ID	Export MPANs/MSIDs	Name	Residual Charging Band	Import Super Red unit charge (p/kWh)	Import fixed charge (p/day)	Import capacity charge (p/kVA/day)	Import exceeded capacity charge (p/kVA/day)	Export Super Red unit charge (p/kWh)	Export fixed charge (p/day)	Export capacity charge (p/kVA/day)	Export exceeded capacity charge (p/kVA/day)
776	2000056563570	976	2000056563589	Tariff 311		0.792	41.89	0.88	0.88	0.000	632.14	0.05	0.05
Y13	2000056866037	Z13	2000056866046	Tariff 312		0.606	18.31	0.93	0.93	0.000	347.92	0.05	0.05
Y14	2000056848135	Z14	2000056848144	Tariff 316		0.000	6.28	1.77	1.77	0.000	1005.50	0.05	0.05
Y15	2000056774592	Z15	2000056774608	Tariff 320		0.224	7.99	0.96	0.96	0.000	666.04	0.05	0.05
Y16	2000056647928	Z16	2000056647946	Tariff 322		0.000	2.48	1.81	1.81	0.000	396.36	0.05	0.05
Y17	2000056456743	Z17	2000056456850	Tariff 329		0.000	35.36	0.89	0.89	0.000	353.65	0.05	0.05
Y18	2000056872183	Z18	2000056872305	Tariff 331		0.000	16.70	1.22	1.22	0.000	1670.14	0.05	0.05
Y50	2000060619240	Z50	2000060619259	Tariff 333		0.000	1.84	0.85	0.85	0.000	559.61	0.05	0.05
838	2000056479129	638	2000056479138	Tariff 339		0.000	61.25	1.10	1.10	0.000	2663.00	0.05	0.05
843	2000056465942	643	2000056465970	Tariff 340		0.000	5.38	1.20	1.20	0.000	412.37	0.05	0.05
871	2000056504928	981	2000056504937	Tariff 341		0.000	9.49	1.05	1.05	0.000	379.53	0.05	0.05
879	2000056522323	988	2000056522332	Tariff 342		0.000	14.23	1.36	1.36	0.000	905.65	0.05	0.05
887	2000056527544	992	2000056527562	Tariff 343		0.227	45.50	2.76	2.76	0.000	9705.66	0.05	0.05
900	2000056873470	950	2000056873498	Tariff 344		0.143	11.79	0.86	0.86	0.000	943.16	0.05	0.05
Y20	2000056873512	Z20	2000056873530	Tariff 346		0.784	31.92	1.51	1.51	0.000	1329.94	0.05	0.05
Y21	2000056644670	Z21	2000056644680	Tariff 347		0.000	4.15	1.38	1.38	0.000	255.62	0.05	0.05
Y31	2000056774788	Z31	2000056774797	Tariff 348		0.000	9.63	1.81	1.81	0.000	2542.01	0.05	0.05
Y45	2000060268250	Z45	2000060268260	Tariff 353		0.000	146.59	1.30	1.30	0.000	586.38	0.05	0.05

Import LLFC / DUoS Tariff ID	Import MPANs/MSIDs	Export LLFC / DUoS Tariff ID	Export MPANs/MSIDs	Name	Residual Charging Band	Import Super Red unit charge (p/kWh)	Import fixed charge (p/day)	Import capacity charge (p/kVA/day)	Import exceeded capacity charge (p/kVA/day)	Export Super Red unit charge (p/kWh)	Export fixed charge (p/day)	Export capacity charge (p/kVA/day)	Export exceeded capacity charge (p/kVA/day)
Y32	2000057382881	Z32	2000057382890	Tariff 354		0.000	4.21	2.40	2.40	0.000	324.23	0.05	0.05
Y38	2000057829816	Z36	2000057829825	Tariff 356		0.000	60.29	2.04	2.04	0.000	2411.42	0.05	0.05
7372	7372	7373	7373	Tariff 365		0.000	35.26	1.09	1.09	0.000	783.61	0.05	0.05
Y22	2000056721085	Z22	2000056721128	Tariff 374		0.000	15.93	1.05	1.05	0.000	382.24	0.05	0.05
Y23	2000056873489	Z23	2000056873503	Tariff 379		0.143	95.49	0.86	0.86	0.000	95.49	0.05	0.05
Y33	2000056970234	Z33	2000056970243	Tariff 381		1.223	16.49	1.06	1.06	0.000	396.76	0.05	0.05
Y46	2000060440639	Z46	2000060440648	Tariff 383		0.000	5616.36	1.16	1.16	0.000	5616.36	0.05	0.05
7459	7459	7460	7460	Tariff 385		0.000	437.40	0.86	0.86	0.000	437.40	0.05	0.05
Y24	2000056879230	Z24	2000056879240	Tariff 391		0.000	2.47	1.81	1.81	0.000	272.73	0.05	0.05
Y25	2000056873521	Z25	2000056873540	Tariff 392		0.766	163.42	1.40	1.40	0.000	163.42	0.05	0.05
Y34	2000057162785	Z34	2000057162794	Tariff 394		0.228	302.20	1.12	1.12	0.000	377.75	0.05	0.05
7615	7615	7616	7616	Tariff 402		0.000	394.60	1.42	1.42	0.000	394.60	0.05	0.05
821	2000057983865	Z37	2000057983847	Tariff 405		0.000	978.72	0.78	0.78	0.000	928.48	0.05	0.05
7515	7515	7516	7516	Tariff 413		0.872	680.20	1.43	1.43	0.000	716.01	0.05	0.05
Y35	2000057082465	Z35	2000057082474	Tariff 414		0.000	153.68	0.88	0.88	0.000	244.49	0.05	0.05
7527	7527	7528	7528	Tariff 415		0.000	757.36	1.03	1.03	0.000	757.36	0.05	0.05
Y28	2000057173796	Z28	2000056212186	Tariff 417		0.226	3.00	2.40	2.40	0.000	434.01	0.05	0.05
897	-	933	-	Tariff 444		0.000	411.91	0.93	0.93	0.000	353.07	0.05	0.05

Import LLFC / DUoS Tariff ID	Import MPANs/MSIDs	Export LLFC / DUoS Tariff ID	Export MPANs/MSIDs	Name	Residual Charging Band	Import Super Red unit charge (p/kWh)	Import fixed charge (p/day)	Import capacity charge (p/kVA/day)	Import exceeded capacity charge (p/kVA/day)	Export Super Red unit charge (p/kWh)	Export fixed charge (p/day)	Export capacity charge (p/kVA/day)	Export exceeded capacity charge (p/kVA/day)
TBC	-	TBC	-	Tariff 445		0.000	2366.50	0.74	0.74	0.000	2366.50	0.05	0.05
897				Tariff 450	3	0.893	18060.46	4.71	4.71	0.000	0.00	0.00	0.00
745	2000054784320, 2000054784330			Tariff 453	4	0.223	80734.63	1.64	1.64	0.000	0.00	0.00	0.00
Y37	2000057337337			Tariff 455	4	0.000	91991.38	1.36	1.36	0.000	0.00	0.00	0.00
897	-			Tariff 460	4	0.380	65892.13	0.65	0.65	0.000	0.00	0.00	0.00
897	-			Tariff 461	4	0.000	66581.39	1.26	1.26	0.000	0.00	0.00	0.00
828	2000057906648	Z04	2000057906657	Tariff 462		0.615	2.07	1.75	1.75	0.000	565.31	0.05	0.05
Y19	2000060019376	402	2000060019385	Tariff 463		0.000	1259.76	0.98	0.98	0.000	1196.36	0.05	0.05
Y55	2000060556184	Z55	2000060556209	Tariff 469		0.208	5.17	1.45	1.45	0.000	393.00	0.05	0.05
739	-			Tariff 470	4	0.000	92304.94	4.57	4.57	0.000	0.00	0.00	0.00
Y56	2000060720482	Z56	2000060720491	Tariff 471		0.000	1822.55	1.39	1.39	0.000	1822.55	0.05	0.05
Y57	2000060526677	Z57	2000060526686	Tariff 473		0.613	11.46	1.45	1.45	0.000	2463.92	0.05	0.05
Y36	2000056598002, 2000056598085, 2000057489980, 2000057489990	Z58	2000060314136	Tariff 474	4	0.000	91833.87	1.73	1.73	0.000	0.00	0.00	0.00
Y59		Z59		Tariff 475		0.000	40.48	1.54	1.54	0.000	4047.92	0.05	0.05
739				Tariff 478	2	1.484	6247.04	2.86	2.86	0.000	0.00	0.00	0.00

Import LLFC / DUoS Tariff ID	Import MPANs/MSIDs	Export LLFC / DUoS Tariff ID	Export MPANs/MSIDs	Name	Residual Charging Band	Import Super Red unit charge (p/kWh)	Import fixed charge (p/day)	Import capacity charge (p/kVA/day)	Import exceeded capacity charge (p/kVA/day)	Export Super Red unit charge (p/kWh)	Export fixed charge (p/day)	Export capacity charge (p/kVA/day)	Export exceeded capacity charge (p/kVA/day)
739				Tariff 479	2	0.000	6833.29	3.54	3.54	0.000	0.00	0.00	0.00
770	2000057985393	610	2000057985409	Tariff 480		0.000	950.27	0.88	0.88	0.000	950.27	0.05	0.05
822	2000060051333	Z30	2000060051342	Tariff 481		0.000	1078.90	0.88	0.88	0.000	1078.90	0.05	0.05
Y04	2000060014536, 2000060068504			Tariff 482	2	1.520	12616.69	0.91	0.91	0.000	0.00	0.00	0.00
Y09	2000060085722	Z09	2000060085731	Tariff 483		0.000	1774.49	0.87	0.87	0.000	8429.09	0.05	0.05
Y39	2000056872582	Z38	2000056872607	Tariff 484		0.000	2.29	1.95	1.95	0.000	181.37	0.05	0.05
Y40	2000060045056	Z39	2000060045126	Tariff 485		0.000	2.29	0.86	0.86	0.000	212.21	0.05	0.05
899				Tariff 487	4	0.000	71861.41	1.82	1.82	0.000	0.00	0.00	0.00
897		933		Tariff 489		0.000	45.61	2.20	2.20	0.000	3283.70	0.05	0.05
Y30	2000060144110	948	2000060144129	Tariff 490		0.000	0.86	2.58	2.58	0.000	673.17	0.05	0.05
869	2000060138082	Z42	2000060138091	Tariff 491		0.000	7780.90	0.86	0.86	0.000	15561.80	0.05	0.05
Z40	2000060129343	Z43	2000060129352	Tariff 492		0.823	10.25	1.34	1.34	0.000	779.33	0.05	0.05
Z41	2000060127114	Z44	2000060127123	Tariff 493		0.000	311.83	0.99	0.99	0.000	311.83	0.05	0.05
Y47	2000060253227	Z47	2000060253236	Tariff 494		0.000	432.53	1.05	1.05	0.000	432.53	0.05	0.05
7529	7529	7530	7530	Tariff 495		0.000	3223.41	0.90	0.90	0.000	3223.41	0.05	0.05
Y61	2000060330778	Z61	2000060330787	Tariff 496		1.154	51.20	1.15	1.15	0.000	9600.47	0.05	0.05
897		933		Tariff 497		0.000	311.95	0.98	0.98	0.000	311.95	0.05	0.05
Y62				Tariff 498	3	0.000	18770.73	1.97	1.97	0.000	0.00	0.00	0.00

Import LLFC / DUoS Tariff ID	Import MPANs/MSIDs	Export LLFC / DUoS Tariff ID	Export MPANs/MSIDs	Name	Residual Charging Band	Import Super Red unit charge (p/kWh)	Import fixed charge (p/day)	Import capacity charge (p/kVA/day)	Import exceeded capacity charge (p/kVA/day)	Export Super Red unit charge (p/kWh)	Export fixed charge (p/day)	Export capacity charge (p/kVA/day)	Export exceeded capacity charge (p/kVA/day)
Y48	2000060125845	Z48	2000060125854	Tariff 501		0.000	45.35	0.89	0.89	0.000	422.39	0.05	0.05
842	2000060129325	920	2000060129334	Tariff 502		0.000	978.72	0.38	0.38	0.000	928.48	0.05	0.05
861	2000060380148			Tariff 503		0.000	133.32	3.15	3.15	0.000	0.00	0.00	0.00
861	2000060380157			Tariff 504		0.000	133.32	3.15	3.15	0.000	0.00	0.00	0.00
Y65	2000060633963	Z65	2000060633972	Tariff 505		0.205	0.76	1.03	1.03	0.000	136.11	0.05	0.05
Y66	2000060635232	Z66	2000060635241	Tariff 506		0.855	35.91	1.01	1.01	0.000	1595.83	0.05	0.05
Y67	2000060637337	Z67	2000060637346	Tariff 507		0.237	242.01	1.01	1.01	0.000	600.09	0.05	0.05
739				Tariff 508	2	0.869	6945.19	3.75	3.75	0.000	0.00	0.00	0.00
739				Tariff 510	2	1.241	6306.14	1.90	1.90	0.000	0.00	0.00	0.00
Y68		Z68		Tariff 512		0.170	181.41	0.89	0.89	0.000	14523.27	0.05	0.05
		Z69		Tariff 513		0.000	0.00	0.00	0.00	0.000	307.46	0.05	0.05
739		749		Tariff 514		0.227	229.61	1.00	1.00	0.000	114.80	0.05	0.05
Y70		Z70		Tariff 515		0.000	1955.03	0.50	0.50	0.000	1859.36	0.05	0.05
739				Tariff 516	2	1.275	6894.72	1.59	1.59	0.000	0.00	0.00	0.00
739				Tariff 517	1	0.650	916.00	1.77	1.77	0.000	0.00	0.00	0.00

Annex 3 - Schedule of Charges for use of the Distribution System by Preserved/Additional LLF Classes

Southern Electric Power Distribution plc - Effective from 1st April 2026 - Final LV and HV tariffs									
Supercustomer preserved charges / additional LLFCs / DUoS Tariff IDs									
	Closed LLFCs / DUoS Tariff IDs	PCs	Red/black unit charge p/kWh	Amber/yellow unit charge p/kWh	Green unit charge p/kWh	Fixed charge p/MPAN/day			
Domestic Aggregated or CT with Residual	124-125	0, 1, 2	14.017	1.866	0.095	5.28			
Domestic Aggregated (Related MPAN)	112-114, 116-120, 122-123	2	14.017	1.866	0.095				
Non-Domestic Aggregated or CT No Residual	Q35, Q40	0, 3, 4, 5-8	12.061	1.606	0.082	15.47			
Non-Domestic Aggregated or CT Band 1	Q36, Q41	0, 3, 4, 5-8	12.061	1.606	0.082	13.57			
Non-Domestic Aggregated or CT Band 2	Q37, Q42	0, 3, 4, 5-8	12.061	1.606	0.082	3.71			
Non-Domestic Aggregated or CT Band 3	Q38, Q43	0, 3, 4, 5-8	11.706	1.250	0.000	0.00			
Non-Domestic Aggregated or CT Band 4	Q39, Q44	0, 3, 4, 5-8	11.422	0.966	0.000	0.00			
Non-Domestic Aggregated (related MPAN)	138-139, 141-143, 145	4	12.061	1.606	0.082				
Notes:	Unit time periods are as specified in Annex 1.								

Site Specific preserved charges / additional LLFCs / DUoS Tariff IDs									
	Closed LLFCs / DUoS Tariff IDs	PCs	Red/black unit charge p/kWh	Amber/yellow unit charge p/kWh	Green unit charge p/kWh	Fixed charge p/MPAN/day	Capacity charge p/kVA/day	Exceeded capacity charge p/kVA/day	Reactive power charge p/kVArh
		0							

Annex 4 - Charges applied to LDNOs with HV/LV end-users

Southern Electric Power Distribution plc - Effective from 1st April 2026 - Final LDNO tariffs

Time Bands for LV and HV Designated Properties			
Time periods	**Red Time Band**	**Amber Time Band**	**Green Time Band**
Monday to Friday (Including Bank Holidays) All Year	16:30 - 19:30		
Monday to Friday (Including Bank Holidays) All Year		07:00 - 16:30 19:30 - 22:00	
Monday to Friday (Including Bank Holidays) All Year			00:00 - 07:00 22:00 - 24:00
Saturday and Sunday All Year		09:30 - 21:30	00:00 - 09:30 21:30 - 24:00
Notes	All the above times are in UK Clock time		

Time Bands for Unmetered Properties			
	Black Time Band	**Yellow Time Band**	**Green Time Band**
Monday to Friday (Including Bank Holidays) March to October Inclusive		07:00 - 22:00	
Monday to Friday (Including Bank Holidays) November to February Inclusive	16:30 - 19:30	07:00 - 16:30 19:30 - 22:00	
Monday to Friday (Including Bank Holidays) April to March Inclusive			00:00 - 07:00 22:00 - 24:00
Saturday and Sunday All Year		09:30 - 21:30	00:00 - 09:30 21:30 - 24:00
Notes	All the above times are in UK Clock time		

Tariff name	Unique billing identifier	PCs	Red/black unit charge p/kWh	Amber/yellow unit charge p/kWh	Green unit charge p/kWh	Fixed charge p/MPAN/day	Capacity charge p/kVA/day	Exceeded capacity charge p/kVA/day	Reactive power charge p/kVArh
LDNO LV: Domestic Aggregated or CT with Residual		**0, 1, 2**	**8.895**	**1.184**	**0.060**	**3.35**			
LDNO LV: Domestic Aggregated (related MPAN)		**2**	**8.895**	**1.184**	**0.060**				

Tariff name	Unique billing identifier	PCs	Red/black unit charge p/kWh	Amber/yellow unit charge p/kWh	Green unit charge p/kWh	Fixed charge p/MPAN/day	Capacity charge p/kVA/day	Exceeded capacity charge p/kVA/day	Reactive power charge p/kVArh
LDNO LV: Non-Domestic Aggregated or CT No Residual		0, 3, 4, 5-8	7.654	1.019	0.052	9.81			
LDNO LV: Non-Domestic Aggregated or CT Band 1		0, 3, 4, 5-8	7.654	1.019	0.052	8.61			
LDNO LV: Non-Domestic Aggregated or CT Band 2		0, 3, 4, 5-8	7.654	1.019	0.052	2.36			
LDNO LV: Non-Domestic Aggregated or CT Band 3		0, 3, 4, 5-8	7.428	0.793	0.000	0.00			
LDNO LV: Non-Domestic Aggregated or CT Band 4		0, 3, 4, 5-8	7.248	0.613	0.000	0.00			
LDNO LV: Non-Domestic Aggregated (related MPAN)		4	7.654	1.019	0.052				
LDNO LV: LV Site Specific No Residual		0	5.413	0.607	0.030	17.90	6.75	6.75	0.159
LDNO LV: LV Site Specific Band 1		0	4.181	0.323	0.018	0.00	6.75	6.75	0.159
LDNO LV: LV Site Specific Band 2		0	3.962	0.323	0.018	0.00	6.75	6.75	0.159
LDNO LV: LV Site Specific Band 3		0	3.752	0.323	0.018	0.00	6.75	6.75	0.159
LDNO LV: LV Site Specific Band 4		0	3.472	0.323	0.018	0.00	6.75	6.75	0.159
LDNO LV: Unmetered Supplies		0, 1 or 8	17.884	3.003	2.086				
LDNO LV: LV Generation Aggregated		0 or 8	-8.447	-1.124	-0.057	0.00			

Tariff name	Unique billing identifier	PCs	Red/black unit charge p/kWh	Amber/yellow unit charge p/kWh	Green unit charge p/kWh	Fixed charge p/MPAN/day	Capacity charge p/kVA/day	Exceeded capacity charge p/kVA/day	Reactive power charge p/kVArh
LDNO LV: LV Generation Site Specific		0	-8.447	-1.124	-0.057	0.00			0.313
LDNO HV: Domestic Aggregated or CT with Residual		0, 1, 2	6.397	0.852	0.043	2.41			
LDNO HV: Domestic Aggregated (Related MPAN)		2	6.397	0.852	0.043				
LDNO HV: Non-Domestic Aggregated or CT No Residual		0, 3, 4, 5-8	5.505	0.733	0.037	7.06			
LDNO HV: Non-Domestic Aggregated or CT Band 1		0, 3, 4, 5-8	5.505	0.733	0.037	6.19			
LDNO HV: Non-Domestic Aggregated or CT Band 2		0, 3, 4, 5-8	5.505	0.733	0.037	1.69			
LDNO HV: Non-Domestic Aggregated or CT Band 3		0, 3, 4, 5-8	5.342	0.570	0.000	0.00			
LDNO HV: Non-Domestic Aggregated or CT Band 4		0, 3, 4, 5-8	5.213	0.441	0.000	0.00			
LDNO HV: Non-Domestic Aggregated (related MPAN)		4	5.505	0.733	0.037				
LDNO HV: LV Site Specific No Residual		0	3.893	0.436	0.021	12.87	4.85	4.85	0.114
LDNO HV: LV Site Specific Band 1		0	3.007	0.232	0.013	0.00	4.85	4.85	0.114
LDNO HV: LV Site Specific Band 2		0	2.849	0.232	0.013	0.00	4.85	4.85	0.114
LDNO HV: LV Site Specific Band 3		0	2.698	0.232	0.013	0.00	4.85	4.85	0.114

Tariff name	Unique billing identifier	PCs	Red/black unit charge p/kWh	Amber/yellow unit charge p/kWh	Green unit charge p/kWh	Fixed charge p/MPAN/day	Capacity charge p/kVA/day	Exceeded capacity charge p/kVA/day	Reactive power charge p/kVArh
LDNO HV: LV Site Specific Band 4		0	2.497	0.232	0.013	0.00	4.85	4.85	0.114
LDNO HV: LV Sub Site Specific No Residual		0	4.276	0.330	0.014	46.80	7.63	7.63	0.102
LDNO HV: LV Sub Site Specific Band 1		0	2.846	0.000	0.000	26.02	7.63	7.63	0.102
LDNO HV: LV Sub Site Specific Band 2		0	2.591	0.000	0.000	26.02	7.63	7.63	0.102
LDNO HV: LV Sub Site Specific Band 3		0	2.348	0.000	0.000	26.02	7.63	7.63	0.102
LDNO HV: LV Sub Site Specific Band 4		0	2.022	0.000	0.000	26.02	7.63	7.63	0.102
LDNO HV: HV Site Specific No Residual		0	3.547	0.244	0.010	205.92	8.50	8.50	0.083
LDNO HV: HV Site Specific Band 1		0	1.070	0.000	0.000	0.00	8.50	8.50	0.083
LDNO HV: HV Site Specific Band 2		0	0.318	0.000	0.000	0.00	8.50	8.50	0.083
LDNO HV: HV Site Specific Band 3		0	0.161	0.000	0.000	0.00	8.50	8.50	0.083
LDNO HV: HV Site Specific Band 4		0	0.000	0.000	0.000	0.00	8.50	8.50	0.083
LDNO HV: Unmetered Supplies		0, 1 or 8	12.862	2.159	1.500				
LDNO HV: LV Generation Aggregated		0 or 8	-8.447	-1.124	-0.057	0.00			

Tariff name	Unique billing identifier	PCs	Red/black unit charge p/kWh	Amber/yellow unit charge p/kWh	Green unit charge p/kWh	Fixed charge p/MPAN/day	Capacity charge p/kVA/day	Exceeded capacity charge p/kVA/day	Reactive power charge p/kVArh
LDNO HV: LV Sub Generation Aggregated		0 or 8	-7.262	-0.861	-0.043	0.00			
LDNO HV: LV Generation Site Specific		0	-8.447	-1.124	-0.057	0.00			0.313
LDNO HV: LV Sub Generation Site Specific		0	-7.262	-0.861	-0.043	0.00			0.230
LDNO HV: HV Generation Site Specific		0	-5.239	-0.404	-0.017	0.00			0.187

Tariff name	Unique billing identifier	PCs	Red/black unit charge p/kWh	Amber/yellow unit charge p/kWh	Green unit charge p/kWh	Fixed charge p/MPAN/day	Capacity charge p/kVA/day	Exceeded capacity charge p/kVA/day	Reactive power charge p/kVArh
LDNO HVplus: Domestic Aggregated or CT with Residual		0, 1, 2	4.646	0.618	0.032	1.75			
LDNO HVplus: Domestic Aggregated (related MPAN)		2	4.646	0.618	0.032				
LDNO HVplus: Non-Domestic Aggregated or CT No Residual		0, 3, 4, 5-8	3.998	0.532	0.027	5.13			
LDNO HVplus: Non-Domestic Aggregated or CT Band 1		0, 3, 4, 5-8	3.998	0.532	0.027	4.50			
LDNO HVplus: Non-Domestic Aggregated or CT Band 2		0, 3, 4, 5-8	3.998	0.532	0.027	1.23			
LDNO HVplus: Non-Domestic Aggregated or CT Band 3		0, 3, 4, 5-8	3.880	0.414	0.000	0.00			
LDNO HVplus: Non-Domestic Aggregated or CT Band 4		0, 3, 4, 5-8	3.786	0.320	0.000	0.00			

Tariff name	Unique billing identifier	PCs	Red/black unit charge p/kWh	Amber/yellow unit charge p/kWh	Green unit charge p/kWh	Fixed charge p/MPAN/day	Capacity charge p/kVA/day	Exceeded capacity charge p/kVA/day	Reactive power charge p/kVArh
LDNO HVplus: Non-Domestic Aggregated (related MPAN)		4	3.998	0.532	0.027				
LDNO HVplus: LV Site Specific No Residual		0	2.827	0.317	0.015	9.35	3.52	3.52	0.083
LDNO HVplus: LV Site Specific Band 1		0	2.184	0.169	0.009	0.00	3.52	3.52	0.083
LDNO HVplus: LV Site Specific Band 2		0	2.069	0.169	0.009	0.00	3.52	3.52	0.083
LDNO HVplus: LV Site Specific Band 3		0	1.960	0.169	0.009	0.00	3.52	3.52	0.083
LDNO HVplus: LV Site Specific Band 4		0	1.813	0.169	0.009	0.00	3.52	3.52	0.083
LDNO HVplus: LV Sub Site Specific No Residual		0	3.031	0.234	0.010	33.18	5.41	5.41	0.072
LDNO HVplus: LV Sub Site Specific Band 1		0	2.017	0.000	0.000	18.45	5.41	5.41	0.072
LDNO HVplus: LV Sub Site Specific Band 2		0	1.837	0.000	0.000	18.45	5.41	5.41	0.072
LDNO HVplus: LV Sub Site Specific Band 3		0	1.664	0.000	0.000	18.45	5.41	5.41	0.072
LDNO HVplus: LV Sub Site Specific Band 4		0	1.433	0.000	0.000	18.45	5.41	5.41	0.072
LDNO HVplus: HV Site Specific No Residual		0	2.488	0.171	0.007	144.44	5.96	5.96	0.058
LDNO HVplus: HV Site Specific Band 1		0	0.751	0.000	0.000	0.00	5.96	5.96	0.058

Tariff name	Unique billing identifier	PCs	Red/black unit charge p/kWh	Amber/yellow unit charge p/kWh	Green unit charge p/kWh	Fixed charge p/MPAN/day	Capacity charge p/kVA/day	Exceeded capacity charge p/kVA/day	Reactive power charge p/kVArh
LDNO HVplus: HV Site Specific Band 2		0	0.223	0.000	0.000	0.00	5.96	5.96	0.058
LDNO HVplus: HV Site Specific Band 3		0	0.113	0.000	0.000	0.00	5.96	5.96	0.058
LDNO HVplus: HV Site Specific Band 4		0	0.000	0.000	0.000	0.00	5.96	5.96	0.058
LDNO HVplus: Unmetered Supplies		0, 1 or 8	9.341	1.568	1.090				
LDNO HVplus: LV Generation Aggregated		0 or 8	-4.412	-0.587	-0.030	0.00			
LDNO HVplus: LV Sub Generation Aggregated		0 or 8	-4.304	-0.510	-0.025	0.00			
LDNO HVplus: LV Generation Site Specific		0	-4.412	-0.587	-0.030	0.00			0.163
LDNO HVplus: LV Sub Generation Site Specific		0	-4.304	-0.510	-0.025	0.00			0.136
LDNO HVplus: HV Generation Site Specific		0	-5.239	-0.404	-0.017	471.07			0.187
LDNO EHV: Domestic Aggregated or CT with Residual		0, 1, 2	3.601	0.479	0.024	1.36			
LDNO EHV: Domestic Aggregated (related MPAN)		2	3.601	0.479	0.024				
LDNO EHV: Non-Domestic Aggregated or CT No Residual		0, 3, 4, 5-8	3.099	0.412	0.021	3.97			
LDNO EHV: Non-Domestic Aggregated or CT Band 1		0, 3, 4, 5-8	3.099	0.412	0.021	3.49			

Tariff name	Unique billing identifier	PCs	Red/black unit charge p/kWh	Amber/yellow unit charge p/kWh	Green unit charge p/kWh	Fixed charge p/MPAN/day	Capacity charge p/kVA/day	Exceeded capacity charge p/kVA/day	Reactive power charge p/kVArh
LDNO EHV: Non-Domestic Aggregated or CT Band 2		0, 3, 4, 5-8	3.099	0.412	0.021	0.95			
LDNO EHV: Non-Domestic Aggregated or CT Band 3		0, 3, 4, 5-8	3.007	0.321	0.000	0.00			
LDNO EHV: Non-Domestic Aggregated or CT Band 4		0, 3, 4, 5-8	2.934	0.248	0.000	0.00			
LDNO EHV: Non-Domestic Aggregated (related MPAN)		4	3.099	0.412	0.021				
LDNO EHV: LV Site Specific No Residual		0	2.191	0.246	0.012	7.24	2.73	2.73	0.064
LDNO EHV: LV Site Specific Band 1		0	1.693	0.131	0.007	0.00	2.73	2.73	0.064
LDNO EHV: LV Site Specific Band 2		0	1.604	0.131	0.007	0.00	2.73	2.73	0.064
LDNO EHV: LV Site Specific Band 3		0	1.519	0.131	0.007	0.00	2.73	2.73	0.064
LDNO EHV: LV Site Specific Band 4		0	1.405	0.131	0.007	0.00	2.73	2.73	0.064
LDNO EHV: LV Sub Site Specific No Residual		0	2.349	0.181	0.008	25.71	4.19	4.19	0.056
LDNO EHV: LV Sub Site Specific Band 1		0	1.564	0.000	0.000	14.30	4.19	4.19	0.056
LDNO EHV: LV Sub Site Specific Band 2		0	1.423	0.000	0.000	14.30	4.19	4.19	0.056
LDNO EHV: LV Sub Site Specific Band 3		0	1.290	0.000	0.000	14.30	4.19	4.19	0.056

Tariff name	Unique billing identifier	PCs	Red/black unit charge p/kWh	Amber/yellow unit charge p/kWh	Green unit charge p/kWh	Fixed charge p/MPAN/day	Capacity charge p/kVA/day	Exceeded capacity charge p/kVA/day	Reactive power charge p/kVArh
LDNO EHV: LV Sub Site Specific Band 4		0	1.111	0.000	0.000	14.30	4.19	4.19	0.056
LDNO EHV: HV Site Specific No Residual		0	1.928	0.132	0.005	111.95	4.62	4.62	0.045
LDNO EHV: HV Site Specific Band 1		0	0.582	0.000	0.000	0.00	4.62	4.62	0.045
LDNO EHV: HV Site Specific Band 2		0	0.173	0.000	0.000	0.00	4.62	4.62	0.045
LDNO EHV: HV Site Specific Band 3		0	0.088	0.000	0.000	0.00	4.62	4.62	0.045
LDNO EHV: HV Site Specific Band 4		0	0.000	0.000	0.000	0.00	4.62	4.62	0.045
LDNO EHV: Unmetered Supplies		0, 1 or 8	7.240	1.215	0.844				
LDNO EHV: LV Generation Aggregated		0 or 8	-3.419	-0.455	-0.023	0.00			
LDNO EHV: LV Sub Generation Aggregated		0 or 8	-3.336	-0.396	-0.020	0.00			
LDNO EHV: LV Generation Site Specific		0	-3.419	-0.455	-0.023	0.00			0.127
LDNO EHV: LV Sub Generation Site Specific		0	-3.336	-0.396	-0.020	0.00			0.105
LDNO EHV: HV Generation Site Specific		0	-4.060	-0.313	-0.013	365.11			0.145
LDNO 132kV/EHV: Domestic Aggregated or CT with Residual		0, 1, 2	2.689	0.358	0.018	1.01			

Tariff name	Unique billing identifier	PCs	Red/black unit charge p/kWh	Amber/yellow unit charge p/kWh	Green unit charge p/kWh	Fixed charge p/MPAN/day	Capacity charge p/kVA/day	Exceeded capacity charge p/kVA/day	Reactive power charge p/kVArh
LDNO 132kV/EHV: Domestic Aggregated (related MPAN)		2	2.689	0.358	0.018				
LDNO 132kV/EHV: Non-Domestic Aggregated or CT No Residual		0, 3, 4, 5-8	2.314	0.308	0.016	2.97			
LDNO 132kV/EHV: Non-Domestic Aggregated or CT Band 1		0, 3, 4, 5-8	2.314	0.308	0.016	2.60			
LDNO 132kV/EHV: Non-Domestic Aggregated or CT Band 2		0, 3, 4, 5-8	2.314	0.308	0.016	0.71			
LDNO 132kV/EHV: Non-Domestic Aggregated or CT Band 3		0, 3, 4, 5-8	2.245	0.240	0.000	0.00			
LDNO 132kV/EHV: Non-Domestic Aggregated or CT Band 4		0, 3, 4, 5-8	2.191	0.185	0.000	0.00			
LDNO 132kV/EHV: Non-Domestic Aggregated (related MPAN)		4	2.314	0.308	0.016				
LDNO 132kV/EHV: LV Site Specific No Residual		0	1.636	0.183	0.009	5.41	2.04	2.04	0.048
LDNO 132kV/EHV: LV Site Specific Band 1		0	1.264	0.098	0.005	0.00	2.04	2.04	0.048
LDNO 132kV/EHV: LV Site Specific Band 2		0	1.197	0.098	0.005	0.00	2.04	2.04	0.048
LDNO 132kV/EHV: LV Site Specific Band 3		0	1.134	0.098	0.005	0.00	2.04	2.04	0.048
LDNO 132kV/EHV: LV Site Specific Band 4		0	1.049	0.098	0.005	0.00	2.04	2.04	0.048
LDNO 132kV/EHV: LV Sub Site Specific No Residual		0	1.754	0.135	0.006	19.20	3.13	3.13	0.042

Tariff name	Unique billing identifier	PCs	Red/black unit charge p/kWh	Amber/yellow unit charge p/kWh	Green unit charge p/kWh	Fixed charge p/MPAN/day	Capacity charge p/kVA/day	Exceeded capacity charge p/kVA/day	Reactive power charge p/kVArh
LDNO 132kV/EHV: LV Sub Site Specific Band 1		0	1.168	0.000	0.000	10.68	3.13	3.13	0.042
LDNO 132kV/EHV: LV Sub Site Specific Band 2		0	1.063	0.000	0.000	10.68	3.13	3.13	0.042
LDNO 132kV/EHV: LV Sub Site Specific Band 3		0	0.963	0.000	0.000	10.68	3.13	3.13	0.042
LDNO 132kV/EHV: LV Sub Site Specific Band 4		0	0.830	0.000	0.000	10.68	3.13	3.13	0.042
LDNO 132kV/EHV: HV Site Specific No Residual		0	1.440	0.099	0.004	83.59	3.45	3.45	0.034
LDNO 132kV/EHV: HV Site Specific Band 1		0	0.434	0.000	0.000	0.00	3.45	3.45	0.034
LDNO 132kV/EHV: HV Site Specific Band 2		0	0.129	0.000	0.000	0.00	3.45	3.45	0.034
LDNO 132kV/EHV: HV Site Specific Band 3		0	0.065	0.000	0.000	0.00	3.45	3.45	0.034
LDNO 132kV/EHV: HV Site Specific Band 4		0	0.000	0.000	0.000	0.00	3.45	3.45	0.034
LDNO 132kV/EHV: Unmetered Supplies		0, 1 or 8	5.406	0.908	0.631				
LDNO 132kV/EHV: LV Generation Aggregated		0 or 8	-2.553	-0.340	-0.017	0.00			
LDNO 132kV/EHV: LV Sub Generation Aggregated		0 or 8	-2.491	-0.295	-0.015	0.00			
LDNO 132kV/EHV: LV Generation Site Specific		0	-2.553	-0.340	-0.017	0.00			0.095

Tariff name	Unique billing identifier	PCs	Red/black unit charge p/kWh	Amber/yellow unit charge p/kWh	Green unit charge p/kWh	Fixed charge p/MPAN/day	Capacity charge p/kVA/day	Exceeded capacity charge p/kVA/day	Reactive power charge p/kVArh
LDNO 132kV/EHV: LV Sub Generation Site Specific		0	-2.491	-0.295	-0.015	0.00			0.079
LDNO 132kV/EHV: HV Generation Site Specific		0	-3.032	-0.234	-0.010	272.61			0.108
LDNO 132kV: Domestic Aggregated or CT with Residual		0, 1, 2	1.941	0.258	0.013	0.73			
LDNO 132kV: Domestic Aggregated (related MPAN)		2	1.941	0.258	0.013				
LDNO 132kV: Non-Domestic Aggregated or CT No Residual		0, 3, 4, 5-8	1.671	0.222	0.011	2.14			
LDNO 132kV: Non-Domestic Aggregated or CT Band 1		0, 3, 4, 5-8	1.671	0.222	0.011	1.88			
LDNO 132kV: Non-Domestic Aggregated or CT Band 2		0, 3, 4, 5-8	1.671	0.222	0.011	0.51			
LDNO 132kV: Non-Domestic Aggregated or CT Band 3		0, 3, 4, 5-8	1.621	0.173	0.000	0.00			
LDNO 132kV: Non-Domestic Aggregated or CT Band 4		0, 3, 4, 5-8	1.582	0.134	0.000	0.00			
LDNO 132kV: Non-Domestic Aggregated (related MPAN)		4	1.671	0.222	0.011				
LDNO 132kV: LV Site Specific No Residual		0	1.181	0.132	0.006	3.91	1.47	1.47	0.035
LDNO 132kV: LV Site Specific Band 1		0	0.913	0.070	0.004	0.00	1.47	1.47	0.035
LDNO 132kV: LV Site Specific Band 2		0	0.865	0.070	0.004	0.00	1.47	1.47	0.035

Tariff name	Unique billing identifier	PCs	Red/black unit charge p/kWh	Amber/yellow unit charge p/kWh	Green unit charge p/kWh	Fixed charge p/MPAN/day	Capacity charge p/kVA/day	Exceeded capacity charge p/kVA/day	Reactive power charge p/kVArh
LDNO 132kV: LV Site Specific Band 3		0	0.819	0.070	0.004	0.00	1.47	1.47	0.035
LDNO 132kV: LV Site Specific Band 4		0	0.758	0.070	0.004	0.00	1.47	1.47	0.035
LDNO 132kV: LV Sub Site Specific No Residual		0	1.267	0.098	0.004	13.86	2.26	2.26	0.030
LDNO 132kV: LV Sub Site Specific Band 1		0	0.843	0.000	0.000	7.71	2.26	2.26	0.030
LDNO 132kV: LV Sub Site Specific Band 2		0	0.767	0.000	0.000	7.71	2.26	2.26	0.030
LDNO 132kV: LV Sub Site Specific Band 3		0	0.695	0.000	0.000	7.71	2.26	2.26	0.030
LDNO 132kV: LV Sub Site Specific Band 4		0	0.599	0.000	0.000	7.71	2.26	2.26	0.030
LDNO 132kV: HV Site Specific No Residual		0	1.040	0.071	0.003	60.36	2.49	2.49	0.024
LDNO 132kV: HV Site Specific Band 1		0	0.314	0.000	0.000	0.00	2.49	2.49	0.024
LDNO 132kV: HV Site Specific Band 2		0	0.093	0.000	0.000	0.00	2.49	2.49	0.024
LDNO 132kV: HV Site Specific Band 3		0	0.047	0.000	0.000	0.00	2.49	2.49	0.024
LDNO 132kV: HV Site Specific Band 4		0	0.000	0.000	0.000	0.00	2.49	2.49	0.024
LDNO 132kV: Unmetered Supplies		0, 1 or 8	3.903	0.655	0.455				

Tariff name	Unique billing identifier	PCs	Red/black unit charge p/kWh	Amber/yellow unit charge p/kWh	Green unit charge p/kWh	Fixed charge p/MPAN/day	Capacity charge p/kVA/day	Exceeded capacity charge p/kVA/day	Reactive power charge p/kVArh
LDNO 132kV: LV Generation Aggregated		0 or 8	-1.843	-0.245	-0.013	0.00			
LDNO 132kV: LV Sub Generation Aggregated		0 or 8	-1.799	-0.213	-0.011	0.00			
LDNO 132kV: LV Generation Site Specific		0	-1.843	-0.245	-0.013	0.00			0.068
LDNO 132kV: LV Sub Generation Site Specific		0	-1.799	-0.213	-0.011	0.00			0.057
LDNO 132kV: HV Generation Site Specific		0	-2.189	-0.169	-0.007	196.85			0.078
LDNO 0000: Domestic Aggregated or CT with Residual		0, 1, 2	0.539	0.072	0.004	0.20			
LDNO 0000: Domestic Aggregated (related MPAN)		2	0.539	0.072	0.004				
LDNO 0000: Non-Domestic Aggregated or CT No Residual		0, 3, 4, 5-8	0.464	0.062	0.003	0.59			
LDNO 0000: Non-Domestic Aggregated or CT Band 1		0, 3, 4, 5-8	0.464	0.062	0.003	0.52			
LDNO 0000: Non-Domestic Aggregated or CT Band 2		0, 3, 4, 5-8	0.464	0.062	0.003	0.14			
LDNO 0000: Non-Domestic Aggregated or CT Band 3		0, 3, 4, 5-8	0.450	0.048	0.000	0.00			
LDNO 0000: Non-Domestic Aggregated or CT Band 4		0, 3, 4, 5-8	0.439	0.037	0.000	0.00			
LDNO 0000: Non-Domestic Aggregated (related MPAN)		4	0.464	0.062	0.003				

Tariff name	Unique billing identifier	PCs	Red/black unit charge p/kWh	Amber/yellow unit charge p/kWh	Green unit charge p/kWh	Fixed charge p/MPAN/day	Capacity charge p/kVA/day	Exceeded capacity charge p/kVA/day	Reactive power charge p/kVArh
LDNO 0000: LV Site Specific No Residual		0	0.328	0.037	0.002	1.08	0.41	0.41	0.010
LDNO 0000: LV Site Specific Band 1		0	0.253	0.020	0.001	0.00	0.41	0.41	0.010
LDNO 0000: LV Site Specific Band 2		0	0.240	0.020	0.001	0.00	0.41	0.41	0.010
LDNO 0000: LV Site Specific Band 3		0	0.227	0.020	0.001	0.00	0.41	0.41	0.010
LDNO 0000: LV Site Specific Band 4		0	0.210	0.020	0.001	0.00	0.41	0.41	0.010
LDNO 0000: LV Sub Site Specific No Residual		0	0.352	0.027	0.001	3.85	0.63	0.63	0.008
LDNO 0000: LV Sub Site Specific Band 1		0	0.234	0.000	0.000	2.14	0.63	0.63	0.008
LDNO 0000: LV Sub Site Specific Band 2		0	0.213	0.000	0.000	2.14	0.63	0.63	0.008
LDNO 0000: LV Sub Site Specific Band 3		0	0.193	0.000	0.000	2.14	0.63	0.63	0.008
LDNO 0000: LV Sub Site Specific Band 4		0	0.166	0.000	0.000	2.14	0.63	0.63	0.008
LDNO 0000: HV Site Specific No Residual		0	0.289	0.020	0.001	16.76	0.69	0.69	0.007
LDNO 0000: HV Site Specific Band 1		0	0.087	0.000	0.000	0.00	0.69	0.69	0.007
LDNO 0000: HV Site Specific Band 2		0	0.026	0.000	0.000	0.00	0.69	0.69	0.007

Tariff name	Unique billing identifier	PCs	Red/black unit charge p/kWh	Amber/yellow unit charge p/kWh	Green unit charge p/kWh	Fixed charge p/MPAN/day	Capacity charge p/kVA/day	Exceeded capacity charge p/kVA/day	Reactive power charge p/kVArh
LDNO 0000: HV Site Specific Band 3		0	0.013	0.000	0.000	0.00	0.69	0.69	0.007
LDNO 0000: HV Site Specific Band 4		0	0.000	0.000	0.000	0.00	0.69	0.69	0.007
LDNO 0000: Unmetered Supplies		0, 1 or 8	1.084	0.182	0.126				
LDNO 0000: LV Generation Aggregated		0 or 8	-0.512	-0.068	-0.003	0.00			
LDNO 0000: LV Sub Generation Aggregated		0 or 8	-0.500	-0.059	-0.003	0.00			
LDNO 0000: LV Generation Site Specific		0	-0.512	-0.068	-0.003	0.00			0.019
LDNO 0000: LV Sub Generation Site Specific		0	-0.500	-0.059	-0.003	0.00			0.016
LDNO 0000: HV Generation Site Specific		0	-0.608	-0.047	-0.002	54.67			0.022

Annex 5 – Schedule of Line Loss Factors

LLF time periods:

Southern Electric Power Distribution plc - LLFs Effective from 1st April 2026				
Time periods	**Period 1**	**Period 2**	**Period 3**	**Period 4**
	Winter Weekday Peak	**Winter Weekday**	**Other**	**Night**
Monday to Friday Nov to Feb	16:00 - 19:00	07:30 - 16:00 19:00 - 20:00	20:00 - 00:30	00:30 - 07:30
Saturday and Sunday All Year and Monday to Friday Mar to Oct			07:30 - 00:30	00:30 - 07:30
Notes	All the above times are in UK Clock time			

Generic demand and generation LLFs					
Metered voltage, respective periods and associated LLFCs / DUoS Tariff IDs					
Metered voltage	**Period 1**	**Period 2**	**Period 3**	**Period 4**	**Associated LLFC / DUoS Tariff ID**
Low Voltage Network	1.064	1.065	1.069	1.078	100-125, 138-145, 150-157, 160-161, 456, 500-503, 520, J99, H00-H64, H70-H79, H85-H89, Q00-Q04, Q55-Q60 / 1, 2, 7, 8, 909, 931
Low Voltage Substation	1.041	1.043	1.048	1.057	H80-H84, H90-H94, J98 / 3, 4, 146, 147, 932
High Voltage Network	1.023	1.023	1.023	1.024	J97, Q35-Q49 / 5, 6, 148, 149, 910
High Voltage Substation	1.013	1.013	1.014	1.014	700-719, 729-732, 735, 739, 745 / 734, 736, 737, 738, 740-743, 747, 749
33kV Generic	1.007	1.007	1.007	1.006	897 / 933
132/33kV Generic	1.007	1.006	1.006	1.007	898 / 934
132kV Generic	1.004	1.004	1.004	1.005	899 / 935

EHV site specific LLFs					
Demand					
Tariff	**Period 1**	**Period 2**	**Period 3**	**Period 4**	**Associated LLFC / DUoS Tariff ID**
Tariff 1	1.013	1.013	1.014	1.014	700
Tariff 2	1.013	1.013	1.014	1.014	701
Tariff 3	1.013	1.013	1.014	1.014	702
Tariff 4	1.013	1.013	1.014	1.014	704

EHV site specific LLFs					
Demand					
Tariff	Period 1	Period 2	Period 3	Period 4	Associated LLFC / DUoS Tariff ID
Tariff 5	1.013	1.013	1.014	1.014	706
Tariff 6	1.013	1.013	1.014	1.014	707
Tariff 7	1.013	1.013	1.014	1.014	708
Tariff 8	1.013	1.013	1.014	1.014	709
Tariff 9	1.013	1.013	1.014	1.014	710
Tariff 10	1.013	1.013	1.014	1.014	711
Tariff 11	1.013	1.013	1.014	1.014	712
Tariff 12	1.013	1.013	1.014	1.014	713
Tariff 13	1.013	1.013	1.014	1.014	714
Tariff 14	1.013	1.013	1.014	1.014	715
Tariff 15	1.013	1.013	1.014	1.014	716
Tariff 16	1.013	1.013	1.014	1.014	717
Tariff 17	1.013	1.013	1.014	1.014	718
Tariff 18	1.013	1.013	1.014	1.014	719
Tariff 19	1.004	1.004	1.004	1.004	800
Tariff 20	1.009	1.010	1.009	1.008	801
Tariff 21	1.014	1.015	1.015	1.012	802
Tariff 22	1.057	1.053	1.052	1.043	803
Tariff 23	1.041	1.037	1.037	1.032	817
Tariff 24	1.039	1.036	1.036	1.032	837
Tariff 25	1.010	1.010	1.010	1.008	804
Tariff 26	1.011	1.010	1.011	1.009	805
Tariff 27	1.006	1.007	1.008	1.005	806
Tariff 28	1.009	1.011	1.012	1.007	807
Tariff 29	1.009	1.009	1.009	1.008	808
Tariff 30	1.007	1.007	1.007	1.006	809
Tariff 31	1.002	1.002	1.002	1.002	810
Tariff 32	1.013	1.019	1.019	1.017	811
Tariff 34	1.017	1.032	1.008	1.005	812
Tariff 35	1.008	1.012	1.015	1.016	813
Tariff 36	1.023	1.029	1.036	1.021	814
Tariff 37	1.007	1.008	1.007	1.006	815
Tariff 38	1.016	1.016	1.015	1.015	816
Tariff 39	1.007	1.010	1.011	1.007	818
Tariff 40	0.999	0.999	0.999	0.999	819
Tariff 41	0.999	0.999	0.999	0.999	7174

EHV site specific LLFs					
Demand					
Tariff	Period 1	Period 2	Period 3	Period 4	Associated LLFC / DUoS Tariff ID
Tariff 43	1.000	1.000	1.000	0.998	823
Tariff 44	1.040	1.035	1.054	1.036	824
Tariff 45	1.011	1.010	1.010	1.010	825
Tariff 46	1.005	1.005	1.005	1.005	826
Tariff 47	1.010	1.011	1.011	1.010	827
Tariff 49	1.002	1.002	1.002	1.002	829
Tariff 50	1.003	1.003	1.004	1.003	820
Tariff 51	1.003	1.003	1.003	1.003	830
Tariff 52	1.003	1.003	1.003	1.003	854
Tariff 53	0.998	0.998	0.998	0.998	835
Tariff 54	1.010	1.009	1.009	1.007	836
Tariff 55	1.004	1.007	1.012	1.009	4033
Tariff 56	1.007	1.007	1.007	1.018	4548
Tariff 57	1.038	1.058	1.069	1.027	839
Tariff 58	1.038	1.058	1.069	1.027	505
Tariff 59	1.009	1.013	1.016	1.006	840
Tariff 60	0.998	1.001	1.001	1.010	7393
Tariff 61	1.006	1.006	1.006	1.005	7394
Tariff 62	1.024	0.997	0.978	0.979	844
Tariff 63	1.024	0.997	0.978	0.979	844
Tariff 64	1.024	0.997	0.978	0.979	844
Tariff 65	1.002	1.002	1.002	1.000	845
Tariff 66	1.041	1.039	1.085	1.034	846
Tariff 67	1.040	1.034	1.025	1.031	847
Tariff 68	1.007	1.010	1.014	1.011	849
Tariff 69	1.000	1.000	1.000	1.000	851
Tariff 70	0.999	1.001	1.007	0.994	853
Tariff 71	1.012	1.013	1.013	1.011	855
Tariff 72	1.018	1.017	1.020	1.015	856
Tariff 73	1.043	1.037	1.044	1.039	857
Tariff 74	1.013	1.014	1.019	1.009	858
Tariff 75	1.012	1.016	1.017	1.012	859
Tariff 76	0.994	0.993	0.993	0.993	860
Tariff 77	1.026	1.027	1.030	1.022	7303
Tariff 78	1.035	1.047	1.057	1.025	863
Tariff 79	1.020	1.014	1.008	1.019	852

EHV site specific LLFs					
Demand					
Tariff	Period 1	Period 2	Period 3	Period 4	Associated LLFC / DUoS Tariff ID
Tariff 80	1.044	1.037	1.033	1.034	862
Tariff 81	1.047	1.050	1.060	1.040	864
Tariff 82	1.017	1.019	1.023	1.015	865
Tariff 83	1.023	1.027	1.031	1.021	866
Tariff 84	1.000	1.000	1.000	1.000	861
Tariff 85	1.000	1.000	1.000	1.000	861
Tariff 86	1.000	1.000	1.000	1.000	861
Tariff 87	1.000	1.000	1.000	1.000	861
Tariff 88	1.000	1.000	1.000	1.000	861
Tariff 89	1.000	1.000	1.000	1.000	861
Tariff 90	0.998	0.998	0.998	0.998	7096
Tariff 92	1.000	1.000	1.000	1.000	7098
Tariff 93	1.000	1.000	1.000	1.000	7097
Tariff 95	1.005	1.005	1.005	1.005	833
Tariff 96	1.033	1.023	1.017	1.027	867
Tariff 97	1.010	1.008	1.009	1.006	868
Tariff 98	1.014	1.012	1.015	1.008	7484
Tariff 99	1.036	1.020	1.011	1.028	870
Tariff 101	1.011	1.011	1.011	1.011	872
Tariff 102	1.040	1.042	1.039	1.037	873
Tariff 103	1.008	1.007	1.007	1.009	874
Tariff 104	1.030	1.027	1.022	1.027	875
Tariff 105	1.013	1.013	1.014	1.014	705
Tariff 106	1.039	1.031	1.025	1.036	876
Tariff 107	1.015	0.992	0.989	1.013	877
Tariff 108	1.052	1.063	1.065	1.048	878
Tariff 110	1.023	1.020	1.020	1.019	880
Tariff 111	1.016	1.009	1.022	1.019	881
Tariff 112	1.021	1.010	1.007	1.017	882
Tariff 113	0.999	0.992	0.990	0.999	883
Tariff 114	1.028	1.008	0.997	1.023	884
Tariff 115	1.028	1.004	0.993	1.022	349
Tariff 116	1.028	1.021	1.026	1.021	885
Tariff 117	1.032	1.030	1.026	1.030	886
Tariff 119	1.032	1.032	0.986	0.966	888
Tariff 120	1.004	0.988	0.979	1.004	889

EHV site specific LLFs					
Demand					
Tariff	Period 1	Period 2	Period 3	Period 4	Associated LLFC / DUoS Tariff ID
Tariff 121	1.008	0.993	0.985	1.004	890
Tariff 122	1.007	1.006	1.006	1.007	834
Tariff 123	1.006	1.008	1.008	1.008	891
Tariff 124	1.007	1.007	1.005	1.005	892
Tariff 125	1.005	0.999	0.994	1.003	893
Tariff 126	1.010	1.007	1.007	1.008	894
Tariff 127	1.056	1.046	1.043	1.033	895
Tariff 128	1.025	1.016	1.036	1.021	896
Tariff 129	1.002	0.991	0.986	1.000	720
Tariff 131	1.035	1.013	1.007	1.027	848
Tariff 132	1.033	1.029	1.031	1.030	722
Tariff 134	1.005	1.004	1.004	1.004	724
Tariff 135	1.031	1.029	1.030	1.023	725
Tariff 136	1.014	0.989	0.974	1.012	726
Tariff 137	1.031	1.005	0.993	1.029	727
Tariff 138	1.032	1.013	1.009	1.025	831
Tariff 139	1.054	1.055	1.050	1.051	832
Tariff 140	1.039	1.027	1.029	1.033	Y00
Tariff 143	1.005	1.003	1.002	1.004	850
Tariff 144	1.004	0.999	0.996	1.003	661
Tariff 146	1.014	1.014	1.013	1.013	662
Tariff 147	1.032	1.021	1.031	1.027	452
Tariff 148	1.019	1.015	1.011	1.018	663
Tariff 149	1.012	1.017	1.009	1.015	Y29
Tariff 151	0.996	0.986	0.984	0.996	458
Tariff 152	1.024	1.018	1.019	1.020	596
Tariff 153	1.029	1.019	1.018	1.020	597
Tariff 154	0.999	0.996	0.995	0.999	665
Tariff 155	1.043	1.038	1.043	1.038	598
Tariff 156	1.023	1.024	1.021	1.022	459
Tariff 158	1.028	1.012	1.008	1.021	599
Tariff 160	1.038	1.039	1.037	1.035	666
Tariff 161	1.028	1.017	1.011	1.027	460
Tariff 162	0.998	0.983	0.978	0.997	650
Tariff 164	1.007	0.997	1.000	1.010	651
Tariff 165	1.004	0.997	0.994	1.002	652

EHV site specific LLFs					
Demand					
Tariff	Period 1	Period 2	Period 3	Period 4	Associated LLFC / DUoS Tariff ID
Tariff 167	1.020	1.012	1.030	1.023	667
Tariff 168	0.998	0.991	0.985	0.996	465
Tariff 169	1.025	1.007	1.007	1.021	653
Tariff 170	1.002	1.001	1.002	1.001	654
Tariff 171	1.003	0.991	0.988	1.001	656
Tariff 173	1.017	1.010	1.007	1.017	664
Tariff 174	1.026	1.018	1.016	1.016	524
Tariff 175	1.059	1.056	1.070	1.058	675
Tariff 176	1.012	1.011	1.010	1.010	676
Tariff 177	1.003	1.003	1.002	1.004	681
Tariff 178	1.023	1.013	1.016	1.018	668
Tariff 179	1.037	1.026	1.027	1.033	670
Tariff 180	1.010	1.006	1.004	1.009	671
Tariff 181	1.019	1.021	1.026	1.015	677
Tariff 182	1.005	1.004	1.003	1.004	678
Tariff 184	1.018	1.013	1.014	1.019	679
Tariff 185	1.004	0.998	0.996	1.001	672
Tariff 186	1.004	0.996	0.994	1.002	680
Tariff 187	1.004	0.996	0.994	1.002	674
Tariff 188	1.004	0.996	0.994	1.002	682
Tariff 189	1.004	0.996	0.994	1.002	Y01
Tariff 190	1.009	1.010	1.012	1.008	683
Tariff 191	1.002	0.988	0.981	0.998	684
Tariff 192	0.999	0.995	0.994	0.998	685
Tariff 194	1.028	1.041	1.046	1.024	686
Tariff 196	1.035	1.037	1.040	1.028	687
Tariff 198	1.011	0.978	0.958	1.006	688
Tariff 199	1.052	1.043	1.048	1.046	525
Tariff 201	0.976	0.978	0.978	0.978	689
Tariff 202	1.017	1.010	1.007	1.017	690
Tariff 205	1.009	1.006	1.007	1.009	691
Tariff 206	1.013	1.013	1.014	1.014	729
Tariff 208	1.015	1.016	1.016	1.012	527
Tariff 209	1.004	0.985	0.957	0.992	692
Tariff 212	1.009	0.981	1.018	1.002	528
Tariff 213	1.000	0.989	0.986	0.999	693

EHV site specific LLFs					
Demand					
Tariff	Period 1	Period 2	Period 3	Period 4	Associated LLFC / DUoS Tariff ID
Tariff 214	1.017	0.997	0.996	1.011	529
Tariff 215	1.016	1.011	1.014	1.013	694
Tariff 218	1.031	1.066	1.037	1.031	585
Tariff 219	1.005	0.993	0.987	1.003	695
Tariff 220	0.997	0.985	0.983	0.995	696
Tariff 222	1.011	1.012	0.980	1.006	Y02
Tariff 225	1.010	1.008	1.007	1.010	595
Tariff 227	1.002	1.003	1.001	1.002	655
Tariff 228	1.014	1.004	1.004	1.012	657
Tariff 229	1.027	1.010	1.000	1.022	659
Tariff 230	1.012	1.009	1.008	1.010	660
Tariff 233	1.034	1.038	1.028	1.032	697
Tariff 234	1.007	1.007	1.007	1.006	Y49
Tariff 235	1.042	1.047	1.045	1.039	669
Tariff 238	0.987	0.990	0.994	0.987	7311
Tariff 240	1.005	0.998	0.996	1.003	698
Tariff 244	1.005	0.992	0.986	1.002	699
Tariff 246	1.013	1.013	1.014	1.014	703
Tariff 247	1.013	1.013	1.014	1.014	730
Tariff 248	1.013	1.013	1.014	1.014	731
Tariff 249	1.013	1.013	1.014	1.014	732
Tariff 250	1.008	1.020	1.021	1.005	673
Tariff 251	1.036	1.035	1.036	1.028	721
Tariff 252	1.028	1.028	1.032	1.026	728
Tariff 253	1.036	1.010	1.005	1.036	901
Tariff 254	1.011	1.006	1.002	1.008	904
Tariff 255	1.008	1.005	1.005	1.007	905
Tariff 256	1.022	1.027	1.029	1.016	906
Tariff 257	1.000	0.978	0.971	0.995	907
Tariff 258	1.000	0.978	0.976	1.001	908
Tariff 260	1.008	0.998	0.997	1.005	723
Tariff 262	1.004	1.002	1.000	1.004	765
Tariff 264	1.015	0.996	0.968	1.016	Y03
Tariff 265	1.017	1.017	1.006	1.014	7492
Tariff 269	1.033	1.032	1.034	1.026	746
Tariff 270	1.012	1.010	1.010	1.010	Y05

EHV site specific LLFs					
Demand					
Tariff	Period 1	Period 2	Period 3	Period 4	Associated LLFC / DUoS Tariff ID
Tariff 275	1.019	1.014	1.012	1.016	766
Tariff 276	1.000	1.000	1.001	1.000	Y06
Tariff 277	1.065	1.055	1.060	1.055	Y26
Tariff 279	1.001	0.991	0.985	1.000	841
Tariff 280	1.003	0.979	0.969	1.001	767
Tariff 283	1.005	0.998	0.996	1.003	768
Tariff 284	0.998	0.998	0.999	0.998	Y07
Tariff 286	1.010	1.011	1.012	1.011	Y27
Tariff 291	1.049	1.041	1.027	1.043	769
Tariff 292	1.003	0.979	0.971	1.001	Y08
Tariff 293	1.031	1.034	1.033	1.030	771
Tariff 294	0.996	0.996	0.997	1.000	7490
Tariff 295	1.009	1.010	1.007	1.007	7496
Tariff 296	1.004	1.003	1.003	1.003	Y10
Tariff 300	1.023	1.018	1.018	1.018	774
Tariff 301	1.019	1.015	1.012	1.015	Y11
Tariff 304	1.017	1.015	1.014	1.013	733
Tariff 305	0.994	0.975	0.968	0.993	775
Tariff 306	1.013	1.011	1.011	1.012	Y12
Tariff 311	1.019	1.013	1.012	1.014	776
Tariff 312	1.068	1.067	1.075	1.064	Y13
Tariff 316	1.006	1.002	1.002	1.005	Y14
Tariff 320	1.037	1.036	1.041	1.034	Y15
Tariff 322	1.010	1.008	1.009	1.010	Y16
Tariff 329	1.011	1.002	1.003	1.010	Y17
Tariff 331	1.003	0.993	0.988	1.001	Y18
Tariff 333	1.007	1.007	1.007	1.006	Y50
Tariff 339	1.005	0.996	0.994	1.003	838
Tariff 340	1.027	1.010	1.000	1.022	843
Tariff 341	1.014	1.004	1.004	1.012	871
Tariff 342	1.010	0.979	0.945	1.011	879
Tariff 343	1.017	1.015	1.013	1.016	887
Tariff 344	1.045	1.058	1.054	1.041	900
Tariff 346	1.003	1.001	0.999	1.002	Y20
Tariff 347	1.005	0.999	0.994	1.003	Y21
Tariff 348	1.009	0.981	1.018	1.002	Y31

EHV site specific LLFs					
Demand					
Tariff	Period 1	Period 2	Period 3	Period 4	Associated LLFC / DUoS Tariff ID
Tariff 353	1.019	1.015	1.012	1.018	Y45
Tariff 354	1.006	1.006	1.005	1.005	Y32
Tariff 356	1.012	1.010	1.008	1.001	Y38
Tariff 365	1.001	1.002	0.998	0.994	7372
Tariff 374	1.007	1.007	1.008	1.005	Y22
Tariff 379	1.042	1.048	1.045	1.039	Y23
Tariff 381	1.001	1.001	1.001	1.000	Y33
Tariff 383	1.017	1.015	1.014	1.016	Y46
Tariff 385	1.007	1.007	1.007	1.006	7459
Tariff 391	1.010	1.008	1.009	1.010	Y24
Tariff 392	1.003	1.001	0.999	1.002	Y25
Tariff 394	1.009	1.007	1.005	1.009	Y34
Tariff 402	1.013	1.013	1.013	1.012	7615
Tariff 405	1.000	1.000	1.000	1.000	821
Tariff 413	1.007	1.007	1.007	1.006	7515
Tariff 414	1.016	1.013	1.014	1.015	Y35
Tariff 415	1.007	1.007	1.007	1.006	7527
Tariff 417	1.032	1.030	1.026	1.030	Y28
Tariff 444	1.007	1.007	1.007	1.006	897
Tariff 445	1.000	1.000	1.000	1.000	TBC
Tariff 450	1.007	1.007	1.007	1.006	897
Tariff 453	1.013	1.013	1.014	1.014	745
Tariff 455	1.002	1.002	1.002	1.002	Y37
Tariff 460	1.007	1.007	1.007	1.006	897
Tariff 461	1.007	1.007	1.007	1.006	897
Tariff 462	1.007	0.971	0.961	1.008	828
Tariff 463	1.001	0.999	0.997	1.001	Y19
Tariff 469	1.007	1.007	1.007	1.006	Y55
Tariff 470	1.013	1.013	1.014	1.014	739
Tariff 471	1.007	1.007	1.007	1.006	Y56
Tariff 473	1.007	1.007	1.007	1.006	Y57
Tariff 474	1.013	1.014	1.015	1.010	Y36
Tariff 475	1.004	1.004	1.004	1.005	Y59
Tariff 478	1.013	1.013	1.014	1.014	739
Tariff 479	1.013	1.013	1.014	1.014	739
Tariff 480	1.006	1.007	1.007	1.007	770

EHV site specific LLFs					
Demand					
Tariff	Period 1	Period 2	Period 3	Period 4	Associated LLFC / DUoS Tariff ID
Tariff 481	1.008	1.007	1.007	1.006	822
Tariff 482	1.014	1.010	1.009	1.012	Y04
Tariff 483	1.033	0.999	0.986	1.022	Y09
Tariff 484	1.011	1.007	1.009	1.011	Y39
Tariff 485	1.011	1.007	1.009	1.011	Y40
Tariff 487	1.004	1.004	1.004	1.005	899
Tariff 489	1.007	1.007	1.007	1.006	897
Tariff 490	1.045	1.013	1.009	1.027	Y30
Tariff 491	1.006	0.999	0.997	1.004	869
Tariff 492	1.023	1.020	1.020	1.022	Z40
Tariff 493	1.025	1.023	1.019	1.022	Z41
Tariff 494	1.008	1.006	1.004	1.008	Y47
Tariff 495	1.007	1.007	1.007	1.006	7529
Tariff 496	1.007	1.007	1.007	1.006	Y61
Tariff 497	1.007	1.007	1.007	1.006	897
Tariff 498	1.007	1.007	1.007	1.006	Y62
Tariff 501	1.008	1.005	1.008	1.005	Y48
Tariff 502	1.000	1.000	1.000	1.000	842
Tariff 503	1.000	1.000	1.000	1.000	861
Tariff 504	1.000	1.000	1.000	1.000	861
Tariff 505	1.007	1.007	1.007	1.006	Y65
Tariff 506	1.007	1.007	1.007	1.006	Y66
Tariff 507	1.007	1.007	1.007	1.006	Y67
Tariff 508	1.013	1.013	1.014	1.014	739
Tariff 510	1.013	1.013	1.014	1.014	739
Tariff 512	1.007	1.007	1.007	1.006	Y68
Tariff 514	1.013	1.013	1.014	1.014	739
Tariff 515	1.004	1.004	1.004	1.005	Y70
Tariff 516	1.013	1.013	1.014	1.014	739
Tariff 517	1.013	1.013	1.014	1.014	739

EHV site specific LLFs					
Generation					
Tariff	Period 1	Period 2	Period 3	Period 4	Associated LLFC / DUoS Tariff ID
Tariff 4	1.013	1.013	1.014	1.014	734
Tariff 5	1.013	1.013	1.014	1.014	736
Tariff 6	1.013	1.013	1.014	1.014	737
Tariff 8	1.013	1.013	1.014	1.014	749
Tariff 9	1.013	1.013	1.014	1.014	740
Tariff 17	1.013	1.013	1.014	1.014	738
Tariff 31	1.030	1.030	1.030	1.031	918
Tariff 36	1.025	1.028	1.034	1.023	929
Tariff 37	1.016	1.011	1.010	1.009	924
Tariff 38	1.016	1.016	1.015	1.014	937
Tariff 41	0.999	0.999	0.999	0.999	7174
Tariff 43	1.002	1.003	1.003	1.002	923
Tariff 45	1.007	1.007	1.007	1.006	933
Tariff 55	1.005	1.008	1.010	1.008	4032
Tariff 56	1.007	1.007	1.007	1.018	4548
Tariff 57	1.032	1.049	1.060	1.021	925
Tariff 58	1.034	1.053	1.056	1.018	521
Tariff 59	1.010	1.014	1.017	1.008	930
Tariff 60	1.000	1.000	1.001	1.008	7390
Tariff 61	0.999	0.999	0.999	1.004	7391
Tariff 62	0.997	0.990	0.987	0.987	917
Tariff 63	0.997	0.990	0.987	0.987	917
Tariff 64	0.997	0.990	0.987	0.987	917
Tariff 66	1.042	1.036	1.067	1.035	927
Tariff 67	1.039	1.034	1.030	1.032	928
Tariff 70	1.010	1.008	1.012	1.004	938
Tariff 74	1.006	1.013	1.018	1.008	921
Tariff 75	1.012	1.016	1.017	1.012	922
Tariff 76	0.997	0.997	0.997	0.997	939
Tariff 78	1.037	1.050	1.060	1.027	941
Tariff 79	1.022	1.016	1.012	1.021	926
Tariff 80	1.046	1.038	1.035	1.037	940
Tariff 81	1.047	1.056	1.070	1.042	942
Tariff 82	1.016	1.020	1.026	1.015	943
Tariff 83	1.023	1.028	1.029	1.021	944
Tariff 90	0.999	0.999	0.999	0.999	7081

EHV site specific LLFs					
Generation					
Tariff	Period 1	Period 2	Period 3	Period 4	Associated LLFC / DUoS Tariff ID
Tariff 91	0.999	0.999	0.999	0.999	7095
Tariff 96	1.036	1.026	1.021	1.030	946
Tariff 97	1.011	1.009	1.010	1.007	947
Tariff 98	1.000	1.000	1.000	1.000	7485
Tariff 99	1.038	1.025	1.017	1.030	949
Tariff 101	1.011	1.013	1.014	1.011	611
Tariff 102	1.033	1.028	1.022	1.031	612
Tariff 103	1.007	1.006	1.006	1.009	613
Tariff 104	1.028	1.024	1.018	1.025	614
Tariff 106	1.032	1.012	1.003	1.030	615
Tariff 107	1.005	0.997	0.996	1.015	616
Tariff 108	1.062	1.070	1.071	1.055	617
Tariff 110	1.022	1.016	1.018	1.019	619
Tariff 111	1.016	1.011	1.023	1.020	620
Tariff 112	1.025	1.016	1.014	1.018	621
Tariff 113	1.000	0.994	0.992	1.000	622
Tariff 114	1.033	1.020	1.016	1.028	623
Tariff 115	1.034	1.019	1.015	1.029	504
Tariff 116	1.033	1.035	1.040	1.025	624
Tariff 117	1.026	1.014	1.012	1.025	625
Tariff 119	1.032	1.031	1.028	1.030	627
Tariff 120	1.009	1.000	0.995	1.008	628
Tariff 121	1.010	1.003	0.999	1.008	629
Tariff 122	1.007	1.006	1.006	1.007	914
Tariff 124	1.007	1.008	1.008	1.006	630
Tariff 125	1.006	1.004	1.001	1.005	631
Tariff 126	1.009	1.006	1.006	1.008	632
Tariff 127	1.049	1.052	1.051	1.035	633
Tariff 128	1.019	1.019	1.028	1.023	634
Tariff 129	1.006	1.002	1.001	1.004	635
Tariff 131	1.039	1.021	1.018	1.032	648
Tariff 132	1.007	1.007	1.007	1.006	637
Tariff 134	1.005	1.006	1.005	1.005	639
Tariff 135	1.031	1.032	1.034	1.024	640
Tariff 136	1.019	1.009	1.003	1.018	641
Tariff 137	1.028	0.995	0.980	1.025	642

EHV site specific LLFs					
Generation					
Tariff	Period 1	Period 2	Period 3	Period 4	Associated LLFC / DUoS Tariff ID
Tariff 138	1.033	1.023	1.019	1.026	645
Tariff 139	1.050	1.044	1.038	1.048	646
Tariff 140	1.041	1.034	1.037	1.035	Z00
Tariff 143	1.005	1.004	1.003	1.004	649
Tariff 144	1.005	1.003	1.001	1.004	911
Tariff 146	1.008	1.009	1.008	1.005	912
Tariff 147	1.035	1.029	1.031	1.030	952
Tariff 148	1.014	1.008	1.003	1.016	913
Tariff 149	1.010	1.005	1.002	1.009	Z29
Tariff 151	0.997	0.990	0.988	0.997	958
Tariff 152	1.025	1.020	1.021	1.021	626
Tariff 153	1.025	1.023	1.024	1.021	607
Tariff 154	0.999	0.998	0.997	0.999	915
Tariff 155	1.045	1.043	1.046	1.038	608
Tariff 156	1.024	1.025	1.022	1.023	959
Tariff 158	1.030	1.018	1.016	1.023	609
Tariff 160	1.034	1.022	1.016	1.031	916
Tariff 161	1.030	1.022	1.016	1.030	960
Tariff 162	1.002	0.993	0.991	1.001	600
Tariff 164	1.009	1.002	1.007	1.012	601
Tariff 165	1.004	0.998	0.996	1.002	602
Tariff 167	1.023	1.018	1.036	1.026	647
Tariff 168	0.999	0.996	0.994	0.998	954
Tariff 169	1.027	1.014	1.014	1.023	603
Tariff 170	1.002	1.002	1.003	1.002	604
Tariff 171	1.006	1.000	0.998	1.004	636
Tariff 173	1.017	1.011	1.008	1.017	964
Tariff 174	1.027	1.028	1.030	1.020	404
Tariff 175	1.052	1.036	1.042	1.039	945
Tariff 176	1.013	1.014	1.014	1.011	936
Tariff 177	1.007	1.006	1.005	1.007	781
Tariff 178	1.029	1.026	1.030	1.023	968
Tariff 179	1.040	1.034	1.036	1.036	970
Tariff 180	1.011	1.010	1.009	1.011	971
Tariff 181	1.021	1.025	1.030	1.017	777
Tariff 182	1.004	1.004	1.004	1.004	778

EHV site specific LLFs					
Generation					
Tariff	Period 1	Period 2	Period 3	Period 4	Associated LLFC / DUoS Tariff ID
Tariff 184	1.024	1.020	1.020	1.022	779
Tariff 185	1.005	1.002	1.001	1.003	972
Tariff 186	1.004	0.998	0.996	1.003	780
Tariff 187	1.004	0.999	0.997	1.003	974
Tariff 188	1.004	0.997	0.995	1.003	782
Tariff 189	1.004	0.996	0.994	1.003	Z01
Tariff 190	1.009	1.010	1.012	1.008	783
Tariff 191	1.004	0.997	0.994	1.002	784
Tariff 192	0.999	0.997	0.996	0.999	785
Tariff 194	1.028	1.035	1.043	1.025	786
Tariff 196	1.039	1.044	1.050	1.031	787
Tariff 198	1.014	0.985	0.966	1.010	788
Tariff 199	1.055	1.050	1.056	1.048	956
Tariff 201	0.983	0.985	0.985	0.985	789
Tariff 202	1.017	1.011	1.009	1.017	790
Tariff 205	1.011	1.012	1.013	1.009	791
Tariff 208	1.015	1.014	1.014	1.012	962
Tariff 209	1.009	0.994	0.986	1.002	792
Tariff 212	1.009	1.007	1.005	1.008	618
Tariff 213	1.002	0.996	0.994	1.002	793
Tariff 214	1.022	1.010	1.009	1.014	989
Tariff 215	1.017	1.014	1.015	1.013	794
Tariff 218	1.033	1.040	1.039	1.032	963
Tariff 219	1.007	1.002	1.000	1.006	795
Tariff 220	0.998	0.992	0.990	0.997	796
Tariff 222	1.013	1.013	0.998	1.009	Z02
Tariff 225	1.011	1.009	1.008	1.010	980
Tariff 227	1.003	1.003	1.003	1.002	955
Tariff 228	1.014	1.006	1.006	1.013	957
Tariff 229	1.030	1.013	1.005	1.024	999
Tariff 230	1.012	1.012	1.011	1.011	450
Tariff 233	1.031	1.033	1.035	1.033	797
Tariff 234	1.007	1.007	1.007	1.006	Z49
Tariff 235	1.043	1.054	1.051	1.040	369
Tariff 238	1.006	1.009	1.013	1.006	7310
Tariff 240	1.006	1.002	1.001	1.004	798

EHV site specific LLFs					
Generation					
Tariff	Period 1	Period 2	Period 3	Period 4	Associated LLFC / DUoS Tariff ID
Tariff 244	1.008	1.001	1.000	1.006	799
Tariff 247	1.013	1.013	1.014	1.014	741
Tariff 248	1.013	1.013	1.014	1.014	742
Tariff 249	1.013	1.013	1.014	1.014	743
Tariff 250	1.008	1.008	1.008	1.005	403
Tariff 251	1.038	1.037	1.038	1.030	451
Tariff 252	1.030	1.032	1.037	1.025	978
Tariff 253	1.044	1.035	1.036	1.044	991
Tariff 254	1.011	1.008	1.005	1.009	994
Tariff 255	1.008	1.007	1.007	1.007	995
Tariff 256	1.024	1.029	1.033	1.017	996
Tariff 257	1.003	0.990	0.984	0.999	997
Tariff 258	1.006	0.993	0.995	1.008	998
Tariff 260	1.011	1.007	1.008	1.009	953
Tariff 262	1.004	1.003	1.002	1.004	983
Tariff 264	1.013	0.991	0.985	1.015	Z03
Tariff 265	1.016	1.017	1.013	1.014	7493
Tariff 269	1.034	1.034	1.035	1.027	748
Tariff 270	1.012	1.012	1.011	1.010	Z05
Tariff 275	1.021	1.019	1.018	1.018	966
Tariff 276	1.002	1.002	1.002	1.002	Z06
Tariff 277	1.067	1.061	1.067	1.057	Z26
Tariff 279	1.001	0.996	0.991	0.998	919
Tariff 280	1.004	0.984	0.975	1.003	467
Tariff 283	1.005	1.001	0.999	1.004	468
Tariff 284	1.000	1.000	1.001	1.000	Z07
Tariff 286	1.008	1.009	1.009	1.008	Z27
Tariff 291	1.049	1.041	1.027	1.043	984
Tariff 292	1.005	0.983	0.974	1.003	Z08
Tariff 293	1.032	1.027	1.034	1.031	951
Tariff 294	1.000	1.000	1.000	1.002	7491
Tariff 295	1.009	1.010	1.009	1.007	7497
Tariff 296	1.004	1.003	1.004	1.003	Z10
Tariff 300	1.022	1.020	1.020	1.018	644
Tariff 301	1.021	1.014	1.015	1.016	Z11
Tariff 304	1.017	1.016	1.014	1.013	744

EHV site specific LLFs					
Generation					
Tariff	Period 1	Period 2	Period 3	Period 4	Associated LLFC / DUoS Tariff ID
Tariff 305	0.998	0.987	0.984	0.998	986
Tariff 306	1.007	1.007	1.007	1.006	933
Tariff 311	1.017	1.013	1.012	1.014	976
Tariff 312	1.071	1.076	1.086	1.067	Z13
Tariff 316	1.007	1.004	1.005	1.006	Z14
Tariff 320	1.037	1.036	1.041	1.035	Z15
Tariff 322	1.011	1.009	1.010	1.009	Z16
Tariff 329	1.012	1.005	1.005	1.012	Z17
Tariff 331	1.003	0.995	0.990	1.001	Z18
Tariff 333	1.007	1.007	1.007	1.006	Z50
Tariff 339	1.005	0.997	0.995	1.003	638
Tariff 340	1.030	1.013	1.005	1.024	643
Tariff 341	1.014	1.006	1.006	1.012	981
Tariff 342	1.012	0.983	0.978	1.010	988
Tariff 343	1.015	1.007	1.004	1.014	992
Tariff 344	1.045	1.056	1.058	1.043	950
Tariff 346	1.004	1.003	1.002	1.003	Z20
Tariff 347	1.006	1.004	1.001	1.005	Z21
Tariff 348	1.009	1.007	1.005	1.008	Z31
Tariff 353	1.009	0.998	0.988	1.012	Z45
Tariff 354	1.004	1.004	1.002	1.003	Z32
Tariff 356	0.983	0.981	0.980	0.964	Z36
Tariff 365	1.011	1.012	1.009	1.005	7373
Tariff 374	1.008	1.008	1.009	1.006	Z22
Tariff 379	1.048	1.050	1.062	1.043	Z23
Tariff 381	1.003	1.003	1.003	1.002	Z33
Tariff 383	1.000	1.000	1.000	1.000	Z46
Tariff 385	1.007	1.007	1.007	1.006	7460
Tariff 391	1.011	1.009	1.010	1.009	Z24
Tariff 392	1.004	1.003	1.002	1.003	Z25
Tariff 394	1.003	1.003	1.000	1.004	Z34
Tariff 402	1.010	1.009	1.009	1.008	7616
Tariff 405	0.978	0.980	0.975	0.986	Z37
Tariff 413	1.007	1.007	1.007	1.006	7516
Tariff 414	1.015	1.013	1.009	1.012	Z35
Tariff 415	1.007	1.007	1.007	1.006	7528

EHV site specific LLFs					
Generation					
Tariff	Period 1	Period 2	Period 3	Period 4	Associated LLFC / DUoS Tariff ID
Tariff 417	1.026	1.014	1.012	1.025	Z28
Tariff 444	1.007	1.007	1.007	1.006	933
Tariff 445	1.000	1.000	1.000	1.000	TBC
Tariff 462	1.012	0.985	0.977	1.007	Z04
Tariff 463	1.013	1.011	1.008	1.012	402
Tariff 469	1.007	1.007	1.007	1.006	Z55
Tariff 471	1.007	1.007	1.007	1.006	Z56
Tariff 473	1.007	1.007	1.007	1.006	Z57
Tariff 474	1.007	1.007	1.007	1.006	Z58
Tariff 475	1.004	1.004	1.004	1.005	Z59
Tariff 480	0.981	0.985	0.982	0.986	610
Tariff 481	1.009	1.007	1.008	1.006	Z30
Tariff 483	1.037	1.019	1.011	1.029	Z09
Tariff 484	1.013	1.010	1.012	1.011	Z38
Tariff 485	1.013	1.010	1.012	1.011	Z39
Tariff 489	1.007	1.007	1.007	1.006	933
Tariff 490	1.054	1.045	1.047	1.038	948
Tariff 491	1.007	1.003	1.002	1.005	Z42
Tariff 492	1.000	1.000	1.000	1.000	Z43
Tariff 493	1.043	1.037	1.033	1.037	Z44
Tariff 494	1.005	1.003	0.999	1.005	Z47
Tariff 495	1.007	1.007	1.007	1.006	7530
Tariff 496	1.007	1.007	1.007	1.006	Z61
Tariff 497	1.007	1.007	1.007	1.006	933
Tariff 501	1.000	1.000	1.000	1.000	Z48
Tariff 502	1.000	1.000	1.000	1.000	920
Tariff 505	1.007	1.007	1.007	1.006	Z65
Tariff 506	1.007	1.007	1.007	1.006	Z66
Tariff 507	1.007	1.007	1.007	1.006	Z67
Tariff 512	1.007	1.007	1.007	1.006	Z68
Tariff 513	1.007	1.007	1.007	1.006	Z69
Tariff 514	1.013	1.013	1.014	1.014	749
Tariff 515	1.004	1.004	1.004	1.005	Z70

Annex 6 – Charges for New or Amended Designated EHV Properties

Note: The list of MPANs / MSIDs provided may be incomplete; the DNO reserves the right to apply the listed charges to any other MPANs / MSIDs associated with the site.

Southern Electric Power Distribution plc - Effective from 1 April 2026 - Final new or amended designated EHV charges														
Effective from date	Import LLFC / DUoS Tariff ID	Import MPANs/MSIDs	Export LLFC / DUoS Tariff ID	Export MPANs/MSIDs	Name	Residual Charging Band	Import Super Red unit charge (p/kWh)	Import fixed charge (p/day)	Import capacity charge (p/kVA/day)	Import exceeded capacity charge (p/kVA/day)	Export Super Red unit charge (p/kWh)	Export fixed charge (p/day)	Export capacity charge (p/kVA/day)	Export exceeded capacity charge (p/kVA/day)
01/04/26	Y01	2000056827906	Z01	2000056827915	Tariff 189		0.000	21.17	0.99	0.99	0.000	367.85	0.05	0.05
01/05/26	Y52	2000060717806	Z52	2000060717815	Tariff 395		0.000	49.79	1.57	1.57	0.000	4100.50	0.05	0.05
01/04/26	Y53	2000060744819	Z53	2000060744828	Tariff 431		0.000	665.23	1.41	1.41	0.000	665.23	0.05	0.05
01/04/26	Y37	2000057337337			Tariff 455	2	0.000	26194.20	1.36	1.36				
01/04/26	Y64	2000060564983	Z64	2000060564992	Tariff 500		0.000	2.75	1.45	1.45	0.000	395.43	0.05	0.05
01/04/26	Y71	2000060759833	Z71	2000060759842	Tariff 518		0.000	1081.13	1.36	1.36	0.000	1138.03	0.05	0.05
01/04/26	Y72	2000060717531	Z72	2000060717540	Tariff 519		0.000	2021.25	1.42	1.42	0.000	2127.63	0.05	0.05
01/04/26	Y73	2000060864732	Z73	2000060864741	Tariff 520		0.000	1793.96	1.96	1.96	0.000	2355.74	0.05	0.05
01/04/26	Y74	2000060759851	Z74	2000060759860	Tariff 521		0.000	1081.13	1.36	1.36	0.000	1138.03	0.05	0.05
01/04/26	Y76		Z75		Tariff 523		0.000	755.30	0.88	0.88	0.000	3394.83	0.05	0.05
01/04/26	899	2000060820841	935	2000060820850	Tariff 535		0.000	23.08	1.38	1.38	0.000	4616.52	0.05	0.05
01/04/26	899	2000060575052	935	2000060575061	Tariff 541		0.000	4248.29	1.53	1.53	0.000	4471.88	0.05	0.05

Southern Electric Power Distribution plc - Effective from 1 April 2026 - Final new or amended designated EHV charges														
Effective from date	Import LLFC / DUoS Tariff ID	Import MPANs/MSIDs	Export LLFC / DUoS Tariff ID	Export MPANs/MSIDs	Name	Residual Charging Band	Import Super Red unit charge (p/kWh)	Import fixed charge (p/day)	Import capacity charge (p/kVA/day)	Import exceeded capacity charge (p/kVA/day)	Export Super Red unit charge (p/kWh)	Export fixed charge (p/day)	Export capacity charge (p/kVA/day)	Export exceeded capacity charge (p/kVA/day)
01/04/26	IDNO	IDNO	IDNO	IDNO	Tariff 543	1	0.000	980.16	0.93	0.93	0.000	7623.96	0.05	0.05
01/04/26	IDNO	IDNO	IDNO	IDNO	Tariff 544	1	0.000	1014.08	0.93	0.93	0.000	7590.03	0.05	0.05
01/04/26	897	2000061003526	933	2000061009012	Tariff 545		0.000	2.72	1.42	1.42	0.000	1426.21	0.05	0.05
01/04/26	847	2000050662007	928	2000050662016	Tariff 67	1	0.000	1092.84	1.00	1.00	0.000	604.98	0.05	0.05
22/04/26	731	2000056151106	742	2000056151115	Tariff 248		0.000	50.79	0.89	0.89	0.000	82.53	0.05	0.05
13/04/26	IDNO	IDNO	IDNO	IDNO	Tariff 546		0.000	222.08	0.94	0.94	0.000	222.08	0.05	0.05
29/05/26	Y75	2000060973334, 2000060973343			Tariff 522	3	0.466	22683.69	1.89	1.89				
01/06/26	899	2000061045660	935	2000061091550	Tariff 542		0.000	6097.67	1.38	1.38	0.000	32028.62	0.05	0.05

Southern Electric Power Distribution plc - Effective from 1 April 2026 - Final new or amended designated EHV line loss factors															
Effective from date	Import LLFC / DUoS Tariff ID	Import MPANs/MSIDs	Export LLFC / DUoS Tariff ID	Export MPANs/MSIDs	Name	Residual Charging Band	Import LLF period 1	Import LLF period 2	Import LLF period 3	Import LLF period 4	Export LLF period 1	Export LLF period 2	Export LLF period 3	Export LLF period 4
01/05/26	Y52	2000060717806	Z52	2000060717815	Tariff 395		1.004	1.004	1.004	1.005	1.004	1.004	1.004	1.005
01/04/26	Y53	2000060744819	Z53	2000060744828	Tariff 431		1.007	1.007	1.007	1.006	1.007	1.007	1.007	1.006
01/04/26	Y64	2000060564983	Z64	2000060564992	Tariff 500		1.007	1.007	1.007	1.006	1.007	1.007	1.007	1.006
01/04/26	Y71	2000060759833	Z71	2000060759842	Tariff 518		1.004	1.004	1.004	1.005	1.004	1.004	1.004	1.005
01/04/26	Y72	2000060717531	Z72	2000060717540	Tariff 519		1.004	1.004	1.004	1.005	1.004	1.004	1.004	1.005
01/04/26	Y73	2000060864732	Z73	2000060864741	Tariff 520		1.004	1.004	1.004	1.005	1.004	1.004	1.004	1.005
01/04/26	Y74	2000060759851	Z74	2000060759860	Tariff 521		1.004	1.004	1.004	1.005	1.004	1.004	1.004	1.005
01/04/26	Y76		Z75		Tariff 523		1.004	1.004	1.004	1.005	1.004	1.004	1.004	1.005
01/04/26	899	2000060820841	935	2000060820850	Tariff 535		1.004	1.004	1.004	1.005	1.004	1.004	1.004	1.005
01/04/26	899	2000060575052	935	2000060575061	Tariff 541		1.004	1.004	1.004	1.005	1.004	1.004	1.004	1.005
01/04/26	IDNO	IDNO	IDNO	IDNO	Tariff 543	1	1.013	1.013	1.014	1.014	1.013	1.013	1.014	1.014
01/04/26	IDNO	IDNO	IDNO	IDNO	Tariff 544	1	1.013	1.013	1.014	1.014	1.013	1.013	1.014	1.014
01/04/26	897	2000061003526	933	2000061009012	Tariff 545		1.007	1.007	1.007	1.006	1.007	1.007	1.007	1.006
13/04/26	IDNO	IDNO	IDNO	IDNO	Tariff 546		1.007	1.007	1.007	1.006	1.007	1.007	1.007	1.006

Southern Electric Power Distribution plc - Effective from 1 April 2026 - Final new or amended designated EHV line loss factors														
Effective from date	Import LLFC / DUoS Tariff ID	Import MPANs/MSIDs	Export LLFC / DUoS Tariff ID	Export MPANs/MSIDs	Name	Residual Charging Band	Import LLF period 1	Import LLF period 2	Import LLF period 3	Import LLF period 4	Export LLF period 1	Export LLF period 2	Export LLF period 3	Export LLF period 4
29/05/26	Y75	2000060973334, 2000060973343			Tariff 522	3	1.007	1.007	1.007	1.006				
01/06/26	899	2000061045660	935	2000061091550	Tariff 542		1.004	1.004	1.004	1.005	1.004	1.004	1.004	1.005

Annex 7 – Final Supplier of last Resort and Eligible Bad Debt Pass-Through Costs

Southern Electric Power Distribution plc - Effective from 1 April 2026 - Final Supplier of Last Resort and Eligible Bad Debt Pass-Through Costs

Tariff name	Open LLFCs / DUoS Tariff IDs / LDNO unique billing identifier	PCs	Supplier of Last Resort Fixed charge adder* p/MPAN/day	Eligible Bad Debt Fixed charge adder** p/MPAN/day
Domestic Aggregated or CT with Residual	100-111, 154-157, 160-161, 456, Q55	0, 1, 2	0.00	0.00
Non-Domestic Aggregated or CT No Residual	H00, H05, H10, H15, H20, H25, H30, H35, H40, H45, H50, H55, H60, H70, H75, H80, Q00, Q56	0, 3, 4, 5-8		0.00
Non-Domestic Aggregated or CT Band 1	H01, H06, H11, H16, H21, H26, H31, H36, H41, H46, H51, H56, H61, H71, H76, H81, Q01, Q57	0, 3, 4, 5-8		0.00
Non-Domestic Aggregated or CT Band 2	H02, H07, H12, H17, H22, H27, H32, H37, H42, H47, H52, H57, H62, H72, H77, H82, Q02, Q58	0, 3, 4, 5-8		0.00
Non-Domestic Aggregated or CT Band 3	H03, H08, H13, H18, H23, H28, H33, H38, H43, H48, H53, H58, H63, H73, H78, H83, Q03, Q59	0, 3, 4, 5-8		0.00
Non-Domestic Aggregated or CT Band 4	H04, H09, H14, H19, H24, H29, H34, H39, H44, H49, H54, H59, H64, H74, H79, H84, Q04, Q60	0, 3, 4, 5-8		0.00

Tariff name	Open LLFCs / DUoS Tariff IDs / LDNO unique billing identifier	PCs	Supplier of Last Resort Fixed charge adder* p/MPAN/day	Eligible Bad Debt Fixed charge adder** p/MPAN/day
LV Site Specific No Residual	H85	0		0.00
LV Site Specific Band 1	H86	0		0.00
LV Site Specific Band 2	H87	0		0.00
LV Site Specific Band 3	H88	0		0.00
LV Site Specific Band 4	H89	0		0.00
LV Sub Site Specific No Residual	H90	0		0.00
LV Sub Site Specific Band 1	H91	0		0.00
LV Sub Site Specific Band 2	H92	0		0.00
LV Sub Site Specific Band 3	H93	0		0.00
LV Sub Site Specific Band 4	H94	0		0.00
HV Site Specific No Residual	Q45	0		0.00
HV Site Specific Band 1	Q46	0		0.00
HV Site Specific Band 2	Q47	0		0.00

Tariff name	Open LLFCs / DUoS Tariff IDs / LDNO unique billing identifier	PCs	Supplier of Last Resort Fixed charge adder* p/MPAN/day	Eligible Bad Debt Fixed charge adder** p/MPAN/day
HV Site Specific Band 3	Q48	0		0.00
HV Site Specific Band 4	Q49	0		0.00
LDNO LV: Domestic Aggregated or CT with Residual		0, 1, 2	0.00	0.00
LDNO LV: Non-Domestic Aggregated or CT No Residual		0, 3, 4, 5-8		0.00
LDNO LV: Non-Domestic Aggregated or CT Band 1		0, 3, 4, 5-8		0.00
LDNO LV: Non-Domestic Aggregated or CT Band 2		0, 3, 4, 5-8		0.00
LDNO LV: Non-Domestic Aggregated or CT Band 3		0, 3, 4, 5-8		0.00
LDNO LV: Non-Domestic Aggregated or CT Band 4		0, 3, 4, 5-8		0.00
LDNO LV: LV Site Specific No Residual		0		0.00
LDNO LV: LV Site Specific Band 1		0		0.00
LDNO LV: LV Site Specific Band 2		0		0.00
LDNO LV: LV Site Specific Band 3		0		0.00
LDNO LV: LV Site Specific Band 4		0		0.00

Tariff name	Open LLFCs / DUoS Tariff IDs / LDNO unique billing identifier	PCs	Supplier of Last Resort Fixed charge adder* p/MPAN/day	Eligible Bad Debt Fixed charge adder** p/MPAN/day
LDNO HV: Domestic Aggregated or CT with Residual		0, 1, 2	0.00	0.00
LDNO HV: Non-Domestic Aggregated or CT No Residual		0, 3, 4, 5-8		0.00
LDNO HV: Non-Domestic Aggregated or CT Band 1		0, 3, 4, 5-8		0.00
LDNO HV: Non-Domestic Aggregated or CT Band 2		0, 3, 4, 5-8		0.00
LDNO HV: Non-Domestic Aggregated or CT Band 3		0, 3, 4, 5-8		0.00
LDNO HV: Non-Domestic Aggregated or CT Band 4		0, 3, 4, 5-8		0.00
LDNO HV: LV Site Specific No Residual		0		0.00
LDNO HV: LV Site Specific Band 1		0		0.00
LDNO HV: LV Site Specific Band 2		0		0.00
LDNO HV: LV Site Specific Band 3		0		0.00
LDNO HV: LV Site Specific Band 4		0		0.00
LDNO HV: LV Sub Site Specific No Residual		0		0.00
LDNO HV: LV Sub Site Specific Band 1		0		0.00

Tariff name	Open LLFCs / DUoS Tariff IDs / LDNO unique billing identifier	PCs	Supplier of Last Resort Fixed charge adder* p/MPAN/day	Eligible Bad Debt Fixed charge adder** p/MPAN/day
LDNO HV: LV Sub Site Specific Band 2		0		0.00
LDNO HV: LV Sub Site Specific Band 3		0		0.00
LDNO HV: LV Sub Site Specific Band 4		0		0.00
LDNO HV: HV Site Specific No Residual		0		0.00
LDNO HV: HV Site Specific Band 1		0		0.00
LDNO HV: HV Site Specific Band 2		0		0.00
LDNO HV: HV Site Specific Band 3		0		0.00
LDNO HV: HV Site Specific Band 4		0		0.00
LDNO HVplus: Domestic Aggregated or CT with Residual		0, 1, 2	0.00	0.00
LDNO HVplus: Non-Domestic Aggregated or CT No Residual		0, 3, 4, 5-8		0.00
LDNO HVplus: Non-Domestic Aggregated or CT Band 1		0, 3, 4, 5-8		0.00
LDNO HVplus: Non-Domestic Aggregated or CT Band 2		0, 3, 4, 5-8		0.00
LDNO HVplus: Non-Domestic Aggregated or CT Band 3		0, 3, 4, 5-8		0.00

Tariff name	Open LLFCs / DUoS Tariff IDs / LDNO unique billing identifier	PCs	Supplier of Last Resort Fixed charge adder* p/MPAN/day	Eligible Bad Debt Fixed charge adder** p/MPAN/day
LDNO HVplus: Non-Domestic Aggregated or CT Band 4		0, 3, 4, 5-8		0.00
LDNO HVplus: LV Site Specific No Residual		0		0.00
LDNO HVplus: LV Site Specific Band 1		0		0.00
LDNO HVplus: LV Site Specific Band 2		0		0.00
LDNO HVplus: LV Site Specific Band 3		0		0.00
LDNO HVplus: LV Site Specific Band 4		0		0.00
LDNO HVplus: LV Sub Site Specific No Residual		0		0.00
LDNO HVplus: LV Sub Site Specific Band 1		0		0.00
LDNO HVplus: LV Sub Site Specific Band 2		0		0.00
LDNO HVplus: LV Sub Site Specific Band 3		0		0.00
LDNO HVplus: LV Sub Site Specific Band 4		0		0.00
LDNO HVplus: HV Site Specific No Residual		0		0.00
LDNO HVplus: HV Site Specific Band 1		0		0.00

Tariff name	Open LLFCs / DUoS Tariff IDs / LDNO unique billing identifier	PCs	Supplier of Last Resort Fixed charge adder* p/MPAN/day	Eligible Bad Debt Fixed charge adder** p/MPAN/day
LDNO HVplus: HV Site Specific Band 2		0		0.00
LDNO HVplus: HV Site Specific Band 3		0		0.00
LDNO HVplus: HV Site Specific Band 4		0		0.00
LDNO EHV: Domestic Aggregated or CT with Residual		0, 1, 2	0.00	0.00
LDNO EHV: Non-Domestic Aggregated or CT No Residual		0, 3, 4, 5-8		0.00
LDNO EHV: Non-Domestic Aggregated or CT Band 1		0, 3, 4, 5-8		0.00
LDNO EHV: Non-Domestic Aggregated or CT Band 2		0, 3, 4, 5-8		0.00
LDNO EHV: Non-Domestic Aggregated or CT Band 3		0, 3, 4, 5-8		0.00
LDNO EHV: Non-Domestic Aggregated or CT Band 4		0, 3, 4, 5-8		0.00
LDNO EHV: LV Site Specific No Residual		0		0.00
LDNO EHV: LV Site Specific Band 1		0		0.00
LDNO EHV: LV Site Specific Band 2		0		0.00
LDNO EHV: LV Site Specific Band 3		0		0.00

Tariff name	Open LLFCs / DUoS Tariff IDs / LDNO unique billing identifier	PCs	Supplier of Last Resort Fixed charge adder* p/MPAN/day	Eligible Bad Debt Fixed charge adder** p/MPAN/day
LDNO EHV: LV Site Specific Band 4		0		0.00
LDNO EHV: LV Sub Site Specific No Residual		0		0.00
LDNO EHV: LV Sub Site Specific Band 1		0		0.00
LDNO EHV: LV Sub Site Specific Band 2		0		0.00
LDNO EHV: LV Sub Site Specific Band 3		0		0.00
LDNO EHV: LV Sub Site Specific Band 4		0		0.00
LDNO EHV: HV Site Specific No Residual		0		0.00
LDNO EHV: HV Site Specific Band 1		0		0.00
LDNO EHV: HV Site Specific Band 2		0		0.00
LDNO EHV: HV Site Specific Band 3		0		0.00
LDNO EHV: HV Site Specific Band 4		0		0.00
LDNO 132kV/EHV: Domestic Aggregated or CT with Residual		0, 1, 2	0.00	0.00
LDNO 132kV/EHV: Non-Domestic Aggregated or CT No Residual		0, 3, 4, 5-8		0.00

Tariff name	Open LLFCs / DUoS Tariff IDs / LDNO unique billing identifier	PCs	Supplier of Last Resort Fixed charge adder* p/MPAN/day	Eligible Bad Debt Fixed charge adder** p/MPAN/day
LDNO 132kV/EHV: Non-Domestic Aggregated or CT Band 1		0, 3, 4, 5-8		0.00
LDNO 132kV/EHV: Non-Domestic Aggregated or CT Band 2		0, 3, 4, 5-8		0.00
LDNO 132kV/EHV: Non-Domestic Aggregated or CT Band 3		0, 3, 4, 5-8		0.00
LDNO 132kV/EHV: Non-Domestic Aggregated or CT Band 4		0, 3, 4, 5-8		0.00
LDNO 132kV/EHV: LV Site Specific No Residual		0		0.00
LDNO 132kV/EHV: LV Site Specific Band 1		0		0.00
LDNO 132kV/EHV: LV Site Specific Band 2		0		0.00
LDNO 132kV/EHV: LV Site Specific Band 3		0		0.00
LDNO 132kV/EHV: LV Site Specific Band 4		0		0.00
LDNO 132kV/EHV: LV Sub Site Specific No Residual		0		0.00
LDNO 132kV/EHV: LV Sub Site Specific Band 1		0		0.00
LDNO 132kV/EHV: LV Sub Site Specific Band 2		0		0.00
LDNO 132kV/EHV: LV Sub Site Specific Band 3		0		0.00

Tariff name	Open LLFCs / DUoS Tariff IDs / LDNO unique billing identifier	PCs	Supplier of Last Resort Fixed charge adder* p/MPAN/day	Eligible Bad Debt Fixed charge adder** p/MPAN/day
LDNO 132kV/EHV: LV Sub Site Specific Band 4		0		0.00
LDNO 132kV/EHV: HV Site Specific No Residual		0		0.00
LDNO 132kV/EHV: HV Site Specific Band 1		0		0.00
LDNO 132kV/EHV: HV Site Specific Band 2		0		0.00
LDNO 132kV/EHV: HV Site Specific Band 3		0		0.00
LDNO 132kV/EHV: HV Site Specific Band 4		0		0.00
LDNO 132kV: Domestic Aggregated or CT with Residual		0, 1, 2	0.00	0.00
LDNO 132kV: Non-Domestic Aggregated or CT No Residual		0, 3, 4, 5-8		0.00
LDNO 132kV: Non-Domestic Aggregated or CT Band 1		0, 3, 4, 5-8		0.00
LDNO 132kV: Non-Domestic Aggregated or CT Band 2		0, 3, 4, 5-8		0.00
LDNO 132kV: Non-Domestic Aggregated or CT Band 3		0, 3, 4, 5-8		0.00
LDNO 132kV: Non-Domestic Aggregated or CT Band 4		0, 3, 4, 5-8		0.00
LDNO 132kV: LV Site Specific No Residual		0		0.00

Tariff name	Open LLFCs / DUoS Tariff IDs / LDNO unique billing identifier	PCs	Supplier of Last Resort Fixed charge adder* p/MPAN/day	Eligible Bad Debt Fixed charge adder** p/MPAN/day
LDNO 132kV: LV Site Specific Band 1		0		0.00
LDNO 132kV: LV Site Specific Band 2		0		0.00
LDNO 132kV: LV Site Specific Band 3		0		0.00
LDNO 132kV: LV Site Specific Band 4		0		0.00
LDNO 132kV: LV Sub Site Specific No Residual		0		0.00
LDNO 132kV: LV Sub Site Specific Band 1		0		0.00
LDNO 132kV: LV Sub Site Specific Band 2		0		0.00
LDNO 132kV: LV Sub Site Specific Band 3		0		0.00
LDNO 132kV: LV Sub Site Specific Band 4		0		0.00
LDNO 132kV: HV Site Specific No Residual		0		0.00
LDNO 132kV: HV Site Specific Band 1		0		0.00
LDNO 132kV: HV Site Specific Band 2		0		0.00
LDNO 132kV: HV Site Specific Band 3		0		0.00

Tariff name	Open LLFCs / DUoS Tariff IDs / LDNO unique billing identifier	PCs	Supplier of Last Resort Fixed charge adder* p/MPAN/day	Eligible Bad Debt Fixed charge adder** p/MPAN/day
LDNO 132kV: HV Site Specific Band 4		0		0.00
LDNO 0000: Domestic Aggregated or CT with Residual		0, 1, 2	0.00	0.00
LDNO 0000: Non-Domestic Aggregated or CT No Residual		0, 3, 4, 5-8		0.00
LDNO 0000: Non-Domestic Aggregated or CT Band 1		0, 3, 4, 5-8		0.00
LDNO 0000: Non-Domestic Aggregated or CT Band 2		0, 3, 4, 5-8		0.00
LDNO 0000: Non-Domestic Aggregated or CT Band 3		0, 3, 4, 5-8		0.00
LDNO 0000: Non-Domestic Aggregated or CT Band 4		0, 3, 4, 5-8		0.00
LDNO 0000: LV Site Specific No Residual		0		0.00
LDNO 0000: LV Site Specific Band 1		0		0.00
LDNO 0000: LV Site Specific Band 2		0		0.00
LDNO 0000: LV Site Specific Band 3		0		0.00
LDNO 0000: LV Site Specific Band 4		0		0.00
LDNO 0000: LV Sub Site Specific No Residual		0		0.00

Tariff name	Open LLFCs / DUoS Tariff IDs / LDNO unique billing identifier	PCs	Supplier of Last Resort Fixed charge adder* p/MPAN/day	Eligible Bad Debt Fixed charge adder** p/MPAN/day
LDNO 0000: LV Sub Site Specific Band 1		0		0.00
LDNO 0000: LV Sub Site Specific Band 2		0		0.00
LDNO 0000: LV Sub Site Specific Band 3		0		0.00
LDNO 0000: LV Sub Site Specific Band 4		0		0.00
LDNO 0000: HV Site Specific No Residual		0		0.00
LDNO 0000: HV Site Specific Band 1		0		0.00
LDNO 0000: HV Site Specific Band 2		0		0.00
LDNO 0000: HV Site Specific Band 3		0		0.00
LDNO 0000: HV Site Specific Band 4		0		0.00

*Supplier of Last Resort pass-through costs allocated to all domestic tariffs with a fixed charge (including LDNO)
**Eligible Bad Debt pass-through costs allocated to all metered demand tariffs (including LDNO)